4104 83rd Ave SE
MERCER ISLAND, WA - MIS076

FLOOR PLAN GENERAL NOTES

GENERAL

A. ALL ANGLED WALLS (OTHER THAN 90°) SHALL BE CONSTRUCTED AS NOTED BY ANGLE (DEGREES) CALLOUT OR CONFIGURED AS DIMENSIONED. (UNO.)

B. ALL DIMENSIONS AT WALLS ARE TO THE FACE OF FRAMING STUDS.

C. ALL EXTERIOR WALLS ENCLOSING CONDITIONED SPACE SHALL BE 2x6 STUDS at 16" OC. and INTERIOR WALLS TO BE 2x4 STUDS at 16" OC. per IRC. R602.3.2 (UNO.)

D. ALL DIMENSIONS AT WINDOWS ARE TO THE CENTERLINE

E. WINDOW SIZES NOTED ON PLANS ARE NOMINAL SO CONTRACTOR MUST VERIFY EXACT ROUGH OPENINGS PRIOR TO FRAMING. WINDOW and DOOR HEAD HEIGHTS SHOULD BE COORDINATED SO THAT ALL WINDOW and DOOR TRIMS ALIGN.

F. PROVIDE WEATHER PROTECTION SYSTEM w/WATER-RESISTIVE BARRIERS IN COMBINATION w/FLASHINGS at EXT. WALLS, OPENINGS, PROJECTIONS, PENETRATIONS and INTERSECTIONS TO LOCK OUT ALL MOISTURE per IRC. R703.1-703.4

G. TILE INSTALLATION SHALL COMPLY w/APPLICABLE SECTIONS OF THE TILE COUNCIL OF AMERICA'S "HANDBOOK FOR CERAMIC TILE INSTALLATION" and ITS REFERENCED STANDARDS including IRC. R702.4.1

H. ALL COUNTERS, TUB DECKS & WALLS AT TUBS & SHOWERS SHALL HAVE SMOOTH, HARD, NON-ABSORBENT SURFACE o/CEMENTITIOUS BACKER BOARD and MOISTURE RESISTANT UNDERLAYMENT per IRC. R702.4.2 NONABSORBENT AT TUB & SHOWER WALLS SHALL BE TO A HEIGHT OF +72" MIN. ABOVE DRAIN INLET per IRC. R307.2

I. ALL SHOWERS AND ALL SHOWER RECEPTORS SHALL COMPLY WITH THE 2018 UNIFORM PLUMBING CODE.

J. CALCULATIONS and DETAILS FOR MOUNTING HEIGHTS & CONNECTION OF METAL GUARDRAILS (IF USED) SHALL BE PROVIDED FOR REVIEW and APPROVAL BY RAILING FABRICATOR PRIOR TO INSTALLATION FOR COMPLIANCE w/IRC R311 & R312

K. ALL REQUIREMENTS FOR BUILDING ENVELOPE TO COMPLY WITH THE 2018 WASHINGTON STATE ENERGY CODE (WSEC). SEE REQ'D ENERGY CREDITS ON THIS SHEET ALONG w/ EN1 FOR PRESCRIPTIVE REQUIREMENTS and COMPLIANCE NOTES FOR SINGLE FAMILY RESIDENTIAL IN CLIMATE ZONE 5 and MARINE 4.

L. WSEC COMPLIANCE CERTIFICATE REQUIRED WITHIN 3' OF ELECTRICAL PANEL.

M. EXHAUST FANS LARGER THAN 50cfm. MAY BE CONNECTED TO 4" SMOOTH WALL VENT PIPE IF RUNS DO NOT EXCEED 20' IN LENGTH, THE MINIMUM SIZE OF FLEX DUCT IS 5" DIAMETER WITH MAXIMUM RUN OF 15'.

N. COMBUSTION AIR REQUIRED FOR ALL FUEL BURNING APPLIANCES. ALL INGITION SOURCES TO BE min. 18" ABV. GARAGE FLOOR per IRC. M1307.3

O. PROVIDE FIREBLOCKING TO CUT OFF DRAFT OPENINGS AT LOCATIONS w/MATERIALS per IRC. R302.11 PROVIDE DRAFTSTOPPING AT FLOOR/CEILING ASSEMBLIES per IRC. R302.12

P. ALL WASTE PLUMBING DROPS TO BE ON INTERIOR WALLS or FURRED OUT EXTERIOR WALLS.

Q. PROVIDE ACOUSTICAL PIPE WRAP AT ALL UPPER LEVEL WASTE LINES

R. ALL OPENINGS MADE IN WALLS, FLOORS or CEILINGS FOR THE PASSAGE OF PIPES, STRAINER PLATES ON DRAIN INLETS, TUB WASTE OPENINGS TO CRAWLSPACE and METER BOXES TO COMPLY w/THE CODE REQUIREMENTS OF THE GOVERNING UPC.

S. ENTRY STEPS SHALL HAVE SUFFICIENT GRADE BUILT UP AROUND THEM SO THE NUMBER OF STAIR RISERS DOES NOT EXCEED 3, w/MAX. RISER HEIGHT OF 7¾" - NOT REQUIRING A HANDRAIL per IRC. R311.7.8

T. ALL EXTERIOR HOSE BIBS TO HAVE NON-REMOVABLE VACUUM BREAKERS, MUST BE FROSTPROOF and BE CAULKED and SECURED AT EXT. WALLS.

U. INTERIOR CEILING HEIGHTS ARE AS FOLLOWS;

MAIN FLOOR	10'-0" (U.N.O.)
UPPER FLOOR	9'-1 1/8" (U.N.O.)

SAFETY GLAZING

SAFETY GLAZING INSTALLED IN HAZARDOUS LOCATIONS AS REQUIRED BY THIS SECTION SHALL HAVE MFGR's DESIGNATION w/TYPE, THICKNESS and SAFETY GLAZING STANDARD with WHICH IT COMPLIES MARKED BY PERMANENT MEANS THAT CANNOT BE REMOVED WITHOUT DESTROYING GLASS per IRC. R308.1

IRC. R308.4 REQUIRES THAT SAFETY GLAZING TO BE INSTALLED IN ALL HARARDOUS LOCATIONS per DEFINED REQUIREMENTS and EXCEPTIONS SPECIFIED IN IRC. R308.4.1 through R308.4.7

1. GLAZING IN DOORS.
2. GLAZING ADJACENT TO DOORS.
3. GLAZING IN WINDOWS MEETING ALL (4) CONDITIONS LISTED.
4. GLAZING IN GUARDS and RAILINGS
5. GLAZING IN and NEAR WET SURFACES.
6. GLAZING ADJACENT TO STAIRS and RAMPS
7. GLAZING ADJACENT TO THE BOTTOM STAIR LANDING.

SKYLIGHTS and SLOPED GLAZING SHALL COMPLY with THE MATERIALS and REQUIREMENTS OF IRC. R308.6.1 through R308.6.9

EGRESS WINDOWS

WINDOWS PROVIDING EMERGENCY ESCAPE and RESCUE OPENING REQUIRED AT BASEMENTS, HABITABLE ATTICS and ALL SLEEPING ROOMS and SHALL OPEN DIRECTLY INTO A PUBLIC WAY or YARD TO SAME per IRC. R310.1

- WINDOW CANNOT REQUIRE KEYS, TOOLS or SPECIAL KNOWLEDGE TO OPEN per IRC. 310.1.1
- MUST HAVE AN OPENING AREA OF NOT LESS THAN 5.7 Sq.Ft. with 20" min. WIDTH and 24" min. HEIGHT per IRC. 310.2.1.2.1
- MUST HAVE A SILL HEIGHT OF NOT MORE THAN 44" ABV. FLOOR per IRC. R310.2.2
- GUARDS MUST BE PROVIDED AS WINDOW FALL PROTECTION AT LOW WINDOWS LOCATED GREATER THAN 72" ABV. FINISHED GRADE per IRC. R312.2

STAIRS and HANDRAILS

STAIRWAYS PROVIDING EGRESS FROM HABITABLE LEVELS NOT PROVIDED w/EGRESS DOOR per IRC. R311.2 SHALL MEET THE REQUIREMENTS and EXCEPTIONS OF IRC. R311.7.1 through R311.7.9 INCLUDING:

- SHALL PROVIDE A MIN. CLEAR WIDTH OF 36" ABOVE HANDRAIL w/MAX. HANDRAIL PROJECTION INTO STAIRWAY OF 4½" ON EITHER SIDE per R311.7.1
- SHALL PROVIDE A MIN. HEADROOM OF 6'-8" MEASURED VERTICALLY FROM THE NOSE OF TREADS or LANDINGS per R311.7.2
- SHALL NOT HAVE A VERTICAL RISE GREATER THAN 151" BTWN. FLOOR LEVELS or LANDINGS per R311.7.3
- SHALL MEET THE WALKLINE REQUIREMENTS AT WINDER TREADS per R311.7.4
- SHALL HAVE A MAX. RISER HEIGHT OF 7¾" and HAVE A MIN. TREAD DEPTH OF 10" THE GREATEST DIMENSION OF ANY RISER or TREAD MUST NOT EXCEED THE SMALLEST DIMENSION BY MORE THAN ⅜". TREADS LESS THAN 11" SHALL MEET NOSING REQUIREMENTS. THE OPENINGS AT OPEN RISERS SHALL NOT PERMIT THE PASSAGE OF A 4"Φ SPHERE per R311.7.5.1 through R311.7.5.4.
- LANDINGS AT TOP and BOTTOM OF STAIRS SHALL MEET THE REQUIREMENTS OF R311.7.6
- THE WALKING SURFACE OF TREADS and LANDINGS SHALL NOT BE SLOPED MORE THAN 2% PER R311.7.7
- HANDRAILS SHALL BE PROVIDED ON AT LEAST ONE SIDE OF EACH CONTINUOUS RUN OF TREADS w/(4) or MORE RISERS. THE TOP OF HANDRAIL SHALL BE 34-38" ABV. LINE CONNECTING NOSINGS, HAVE MIN. 1½" SPACE BETWN. RAIL and WALL, HANDRAIL MUST RUN CONTINUOUS FOR FULL LENGTH OF EACH FLIGHT and MEET APPROVED GRIP-SIZE per IRC. R311.7.8
- SHALL BE PROVIDED w/ILLUMINATION per IRC. R303.7 at INTERIOR STAIRWAYS and R303.8 at EXTERIOR STAIRWAYS.

GUARDS

GUARDS SHALL BE PROVIDED IN ACCORDANCE w/REQUIREMENTS and EXCEPTIONS OF IRC. R312.1 through R312.2 INCLUDING:

- ALONG OPEN-SIDED WALKING SURFACES, INCLUDING STAIRS, RAMPS and LANDINGS LOCATED 30" or GREATER ABOVE ADJACENT FLOOR LEVEL per IRC. 312.1.1
- OPENINGS MUST PREVENT THE PASSAGE OF A 4" SPHERE or 4⅜" AT OPEN SIDES OF STAIRS or 6" AT TRIANGLE OF TREAD, RISER & BOTTOM RAIL per R312.1.3
- GUARDS MUST BE PROVIDED AS WINDOW FALL PROTECTION AT LOW WINDOWS LOCATED GREATER THAN 72" ABV. FINISHED GRADE per IRC. R312.2

GUARDS and HANDRAILS MUST RESIST A SINGLE CONCENTRATED LOAD OF 200lbs. IN ANY DIRECTION ALONG THE TOP and GUARD INFILL MUST RESIST A 50lb. LOAD APPLIED HORIZ. OVER 1 Sq.Ft. per IRC. TABLE R301.5

ALARMS

SMOKE ALARMS and CARBON MONOXIDE ALARMS REQUIRED IN ALL NEW DWELLINGS SHALL MEET REQUIREMENTS and EXCEPTIONS OF NFPA 72, IRC. R314 and R315.

- SMOKE ALARMS TO BE LISTED and INSTALLED IN ACCORDANCE w/IRC. R314.1.1 and CARBON MONOXIDE ALARMS IN ACCORDANCE w/IRC. 315.1.1
- SMOKE ALARMS SHALL BE INSTALLED IN FOLLOWING LOCATIONS per R314.3 :
  1. IN EACH SLEEPING ROOM.
  2. OUTSIDE EACH SEPARTE SLEEPING AREA.
  3. ON EACH STORY OF THE DWELLING.
  4. NOT LESS THAN 3' FROM A BATHROOM w/TUB or SHOWER.
  5. NOT NEAR COOKING APPLIANCES per R314.3.1
- SMOKE ALARMS SHALL BE INTERCONNECTED per R314.4
- CARBON MONOXIDE ALARMS SHALL BE INSTALLED IN THE FOLLOWING LOCATIONS per R315.3 :
  1. ON EACH STORY OF THE DWELLING
  2. ADJACENT TO EACH SEPARATE SLEEPING AREA.
  3. WITHIN BEDROOMS WHERE A FUEL BURNING FIREPLACE IS LOCATED IN THE ROOM or ITS ATTACHED BATH.
- ALL ALARMS SHALL RECEIVE THEIR PRIMARY POWER FROM BUILDING WIRING w/BATTERY BACKUP per R314.6 and R315.5
- COMBINATION SMOKE and CARBON MONOXIDE ALARMS SHALL BE PERMITTED IN LIEU OF SEPARATE ALARMS per R314.5 and R315.4

BUILDING CODES FOR THIS SET

CITY OF MERCER ISLAND CODES AT THE DATE OF THIS DRAWING SET:

2018 INTERNATIONAL BUILDING CODE (IBC)
2018 INTERNATIONAL RESIDENTIAL CODE (IRC)
2018 WASHINGTON STATE ENERGY CODES
2018 ICC A117.1, BARRIER-FREE STANDARD
2018 INTERNATIONAL FIRE CODE (IFC)
2018 NATIONAL ELECTRIC CODE (NEC)
2018 UNIFORM PLUMBING CODE (UPC)
2018 INTERNATIONAL MECHANICAL CODE (IMC)
2018 INTERNATIONAL FUEL GAS CODE (IFGC)
2018 POOL AND SPA CODE

A NFPA 13R Fire Sprinkler System in compliance with NFPA 13R and CoMI standards shall be installed throughout the residence. A separate FIRE permit

A NFPA 72-Chapter 29 Monitored Fire Alarm System in compliance with NFPA 72 and CoMI standards shall be installed throughout the residence A separate FIRE permit is required.

PROPERTY DESCRIPTION
Legal Description: LOT B, BLOCK 1, ISLAND RIDGE TRACTS, ACCORDING TO THE PLAT RECORDED IN VOLUME 47 OF PLATS, PAGE 71, IN KING COUNTY, WA.

Parcel Number: 3626500040

Zone: R9.6

ABBREVIATIONS

#	Pound OR Number
&	And
@	At
A/C	Air Conditioner
AB	Anchor Bolt
ABV	Above
AD	Area Drain
ADDL	Additional
ADH	Adhesive
ADJ	Adjustable
AFF	Above Finish Floor
AGG	Aggregate
ALT	Alternate
ALUM	Aluminum
ANC	Anchor
APX	Approximate
ASPH	Asphalt
AUTO	Automatic
AVR	Average
AWG	American Wire Gauge
AWN	Awning
B/O	By Others
BD	Board
BLDG	Building
BLKG	Blocking
BLW	Below
BM	Beam
BOF	Bottom of footing
BOT	Bottom
BOW	Bottom of wall
BR	Bedroom
BSMT	Basement
BTW	Between
BYND	Beyond
CAB	Cabinet
CAS	Casement
CB	Catch Basin Ventilating
CC	Center to Center
CIP	cast-in-place
CJ	Control Joint
CL	Centerline
CLG	Ceiling
CLR	Clear
CMU	Concrete Masonry Unit
CO	Clean Out
COL	Column
CONC	Concrete
CONT	Continuous
CRPT	Carpet
CT	Ceramic Tile
CTYD	Courtyard
CU FT	Cubic Feet
CU YD	Cubic Yard
DBL	Double
DEMO	Demolish or Demolition
DH	Double Hung
DIA	Diameter
DIM	Dimension
DN	Down
DP	Damp proofing
DR	Door
DRWR	Drawer
DS	Downspout
DT	Drain Tile
DW	Dishwasher
DWG	Drawing
EA	Each
EF	Exhaust fan
EJ	Expansion Joint
EL	Elevation
ELEC	Electrical
ELEV	Elevation
EQ	Equal
EW	Each Way
EXC	Excavate
EXH	Exhaust
EXIST	Existing
EXT	Exterior
FBD	Fiberboard
FCB	Fiber Cement Board
FCO	Floor clean out
FD	Floor drain
FIN	Finish
FIXT	Fixture
FLOR	Fluorescent
FLR	Floor
FLSH	Flashing
FND	Foundation
FO	Face Of
FOC	Face of Concrete
FOM	Face of Masonry
FOS	Face of Studs
FOW	Face of Wall
FPL	Fireplace
FRM	Frame(ing)
FRPF	Fireproof
FT	Foot
FTG	Footing
FUR	Furred
GA	Gauge
GALV	Galvanized
GFCI	Ground Fault Circuit Interrupt
GFI	Ground Fault Interrupt
GL	Glass
GLB	Glue Laminated Beam
GLBK	Glass Block
GWB	Gypsum Wall Board
GYP	Gypsum
HB	Hose Bib
HC	Hollow Core
HDR	Header
HDWR	Hardware
HT	Height
HVAC	Heat-Vent-Air Conditioning
HW	Hot water
ID	Inside Diameter
ILO	In Lieu Of
IN	Inch
INCL	Include
INS	Insulate(tion)
INSUL	Insulation
INT	Interior
J-Box	Junction box
JNT	Joint
JST	Joist
KD	Kiln Dried
KIT	Kitchen
LAM	Laminate(d)
LAV	Lavatory
LB	Pound
LF	Lineal Feet
LL	Live Load
LT	Light
LTG	Lighting
LVL	Laminated Veneer Lumber
LVR	Louver
MAS	Masonry
MAX	Maximum
MBR	Member
MC	Medicine Cabinet
MDO	Medium Density Overlay
MECH	Mechanical
MED	Medium
MEMB	Membrane
MFR	Manufacturer
MIN	Minimum
MIR	Mirror
MISC	Miscellaneous
MLB	Micro Laminate Beam
MMB	Membrane
MTL	Metal
MWK	Millwork
NIC	Not in Contract
NO	#
NO	Number
NOM	Nominal
NTS	Not to Scale
O	Non-Operable Window Section
OBS	Obscure
OC	On Center
OD	Outside Diameter
OH	Overhang
OP	Opaque
OPG	Opening
OPNG	Opening or Rough Opening
OSB	Orientated Strand Board
PBD	Particle Board
PBF	Prefabricated
PERF	Perforate(d)
PL	Property Line
PLAM	Plastic Laminate
PLT	Plate
PLYWD	Plywood
PNT	Paint or Painted
PSF	Pounds Per Square Foot
PSI	Pounds Per Square Inch
PT	Pressure Treated
PVC	Polyvinyl Chloride
PVMT	Pavement
R	Riser
R&S	Rod and Shelf
RC	Reinforced Concrete
RD	Rod
RD	Roof Drain
RDL	Roof drain leader
REBAR	Reinforcing Bar
REFR	Ref
REG	Register
RENF	Reinforced
REQ	Required
REQD	Required
REV	Revision
RFG	Roofing
RM	Room
RO	Rough Opening
ROW	Right of way
SA	Supply Air
SCH	Schedule
SCN	Screen
SD	Smoke detector
SECT	Section
SGD	Sliding Glass Door
SH	Shelf
SHTH	Sheathing
SIM	Similar
SIM	Similar
SLB	Slab
SPEC	Specification
SQ	Square
SQ IN	Square inches
SQFT	Square feet
STC	Sound Transmission Coefficient
STD	Standard
STL	Steel
STR	Structural
STRUCT	Structure or Structural
SY	Square yard
T	Tread
T&G	Tongue and Groove
TEL	Telephone
TEMP	Tempered
TK	Tight Knot
TME	To Match Existing
TO	Top Of
TOB	Top of Beam
TOC	Top of curb/ Top of Concrete
TOF	Top of footing
TOJ	Top of joist
TOW	Top of wall
TP	Toilet Paper Hanger
TYP	Typical
UNO	Unless Noted Otherwise
VB	Vapor barrier
VERT	Vertical
VIF	Verify in field
W/	With
W/O	Without
WC	Toilet (water closet)
WD	Wood
WDW	Window
WH	Water Heater
WIC	Walk-In Closet
WP	Water Proofing
WP	Weatherproof
WR	Weather Resistant
WRB	Weather Resistive Barrier
WWF	Welded Wire Fabric
X	Operable Window Section

PROJECT TEAM

ARCHITECTURAL DESIGN -
JAYMARC HOMES

ARCHITECTURAL DRAFTING
JAYMARC HOMES - 425.226.9100 - JAYMARCHOMES.COM
RYAN REDMAN - RYAN@JAYMARCHOMES.COM

M&K ENGINEERING
MULHERN & KULP - 215.646.8001 - MULHERNKULP.COM
RICHARD ZABEL - RZABEL@MULHERNKULP.COM

COVER SHEET

1/4" = 1'-0"

GENERAL INFORMATION APPLIES FULL SET

SHEET INDEX

SHEET #	DESCRIPTION
A1	COVERSHEET
A1.1	PLAN REVISION LOG
A2	SITE PLAN
A2.1	SITE PLAN DETAILS
A3	FOUNDATION PLAN
A4	MAIN FLOOR FRAMING PLAN
A5	MAIN FLOOR PLAN
A6	UPPER FLOOR FRAMING PLAN
A7	UPPER FLOOR PLAN
A8	ROOF FRAMING PLAN
A9	ROOF PLAN
A10	EXTERIOR ELEVATIONS
A11	EXTERIOR ELEVATIONS
A12	BUILDING SECTIONS
S0.0	LATERAL - STRUCTURAL GENERAL NOTES
LB-1	LATERAL - DETAILS
LB-2	LATERAL - DETAILS
SD.01	FOUNDATION DETAILS
EN1	2018 ENERGY CODE CALCULATIONS
1 OF 4	TESCP
2 OF 4	UTILITY AND TREE PLAN
3 OF 4	UTILITY DETAILS
4 OF 4	AMENDED SOIL MAP
	TREE REPLACEMENT PLAN
SURVEY	SURVEY

CONSTRUCTION AREAS:
SQUARE FOOTAGE SUMMARY

MAIN FLOOR AREA	2,569	S.F.
UPPER FLOOR AREA	2,289	S.F.
TOTAL CONDITIONED AREA	4,858	S.F.
2 CAR GARAGE	587	S.F.
COV'D PATIO	450	S.F.
COV'D PORCH	500	S.F.
TOTAL AREA UNDER ROOF	6,395	S.F.
OVERALL WIDTH	77'-9"	
OVERALL DEPTH	51'-7"	

Updated : 10/xx/2017

Method for Calculating Square Footage - ANSI Z765-2013 except: no separate distinction of 'above-grade or below-grade' areas and each level is measured to the outside of studs not the exterior finished surface.

Square footage calculations for this house were made based on plan dimensions only and may vary from the finished square footage of the house as built.

See Sheet "CODES" for additional Zoning required Area Calculations

JAYMARC HOMES
7525 SE 24th St., 487
Mercer Island, WA
98040
425.266.9100

Issue	Issue Date	By
Description		
	08.27.24	
CITY PLAN REVIEW COMMENTS		
	10.14.24	
V.E. & S.K. REVISIONS		

4104 83rd Ave SE
MERCER ISLAND, WA.
Job Number:
MIS075

plan name: --
marketing name: ASTORIA
plan number: MIS075
mark sys. number: --

Conditions not specifically represented graphically or in writing or which conflict with the current International Residential Code (IRC.) or those of the local municipality then the current standards and requirements of each respectively shall govern.

The drawings in this set are instruments of service and shall remain the property of JayMarc Homes, LLC.

02.21.24
Submittal Date

Sheet Title/Description

JAYMARC HOMES
Design Firm

R.R.
Drawn by:

R.R./ S.K.
Checked by:

Primary Scale

Sheet Title/Description

A1
of: .

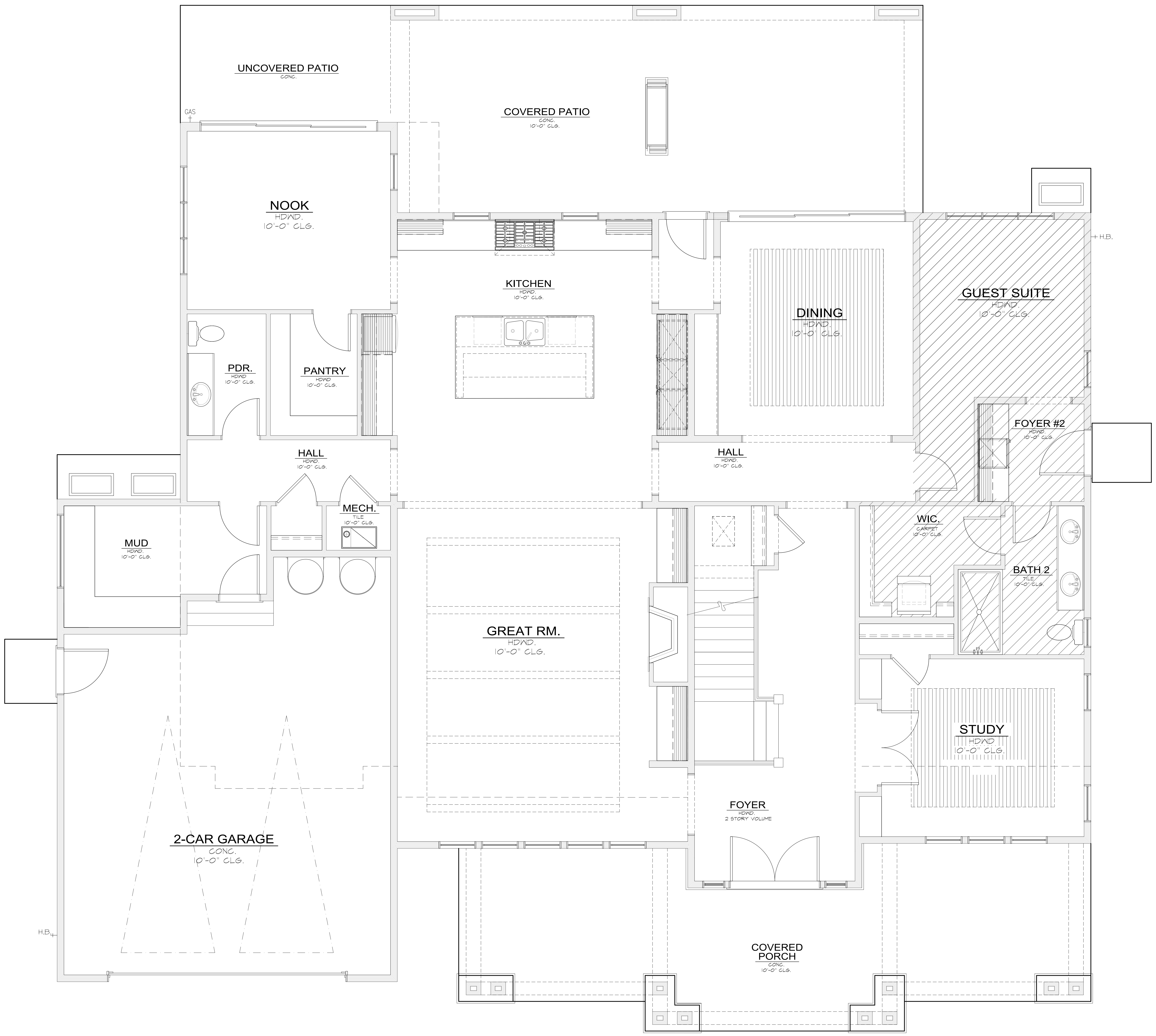
UNCOVERED PATIO
CONC.
GAS
COVERED PATIO
CONC.
10'-0" CLG.
NOOK
HDWD.
10'-0" CLG.
KITCHEN
HDWD.
10'-0" CLG.
DINING
HDWD.
10'-0" CLG.
GUEST SUITE
HDWD.
10'-0" CLG.
H.B.
PDR.
HDWD.
10'-0" CLG.
PANTRY
HDWD.
10'-0" CLG.
HALL
HDWD.
10'-0" CLG.
HALL
HDWD.
10'-0" CLG.
FOYER #2
HDWD.
10'-0" CLG.
MECH.
TILE
10'-0" CLG.
MUD
HDWD.
10'-0" CLG.
WIC.
CARPET
10'-0" CLG.
BATH 2
TILE
10'-0" CLG.
GREAT RM.
HDWD.
10'-0" CLG.
STUDY
HDWD.
10'-0" CLG.
2-CAR GARAGE
CONC.
10'-0" CLG.
H.B.
FOYER
HDWD.
2 STORY VOLUME
COVERED PORCH
CONC.
10'-0" CLG.

MAIN FLOOR PLAN

1/4" = 1'-0"

ADU PLAN INFORMATION

1/4" = 1'-0"

▨ HATCH REPRESENTS A.D.U. UNIT AND LOCATION TO BUILDING ENVELOPE

G.F.A. CALCULATIONS:

SQUARE FOOTAGE SUMMARY

MAIN FLOOR/ MAIN LIVING	2,199	S.F.
A.D.U.	370	S.F.
GARAGE	587	S.F.
SUB TOTAL	3,156	S.F.
UPPER FLOOR/ MAIN LIVING	2,556	S.F.
MINUS MAIN STAIRS	-86	S.F.
SUB TOTAL	2,470	S.F.
TOTAL G.F.A.	5,626	S.F.
ALLOWABLE F.A.R. 40%	5,631	S.F.
PROPOSED	39.96	%.

Updated : 03/09/2018

Method for Calculating Square Footage - ANSI Z765-2013 except: no separate distinction of 'above-grade or below-grade' areas and each level is measured to the outside of studs not the exterior finished surface.

Square footage calculations for this house were made based on plan dimensions only and may vary from the finished square footage of the house as built.

See Sheet "CODES" for additional Zoning required Area Calculations

JAYMARC
HOMES

7525 SE 24th St., 487
Mercer Island, WA
98040
425.266.9100

△ Issue Issue Date By
Description

△

08.27.24
CITY PLAN REVIEW COMMENTS

4104 83rd Ave SE
MERCER ISLAND, WA.

Job Number:
MIS075

plan name: --
marketing name: ASTORIA
plan number: MIS075
mark sys. number:--

Conditions not specifically represented graphically or in writing or which conflict with the current International Residential Code (IRC.) or those of the local municipality then the current standards and requirements of each respectively shall govern.

The drawings in this set are instruments of service and shall remain the property of JayMarc Homes, LLC.

02.21.24
Submittal Date

Sheet Title/Description

JAYMARC HOMES
Design Firm

R.R.
Drawn by:

R.R./ S.K.
Checked by:

Primary Scale

Sheet Title/Description

A1.2
of: .

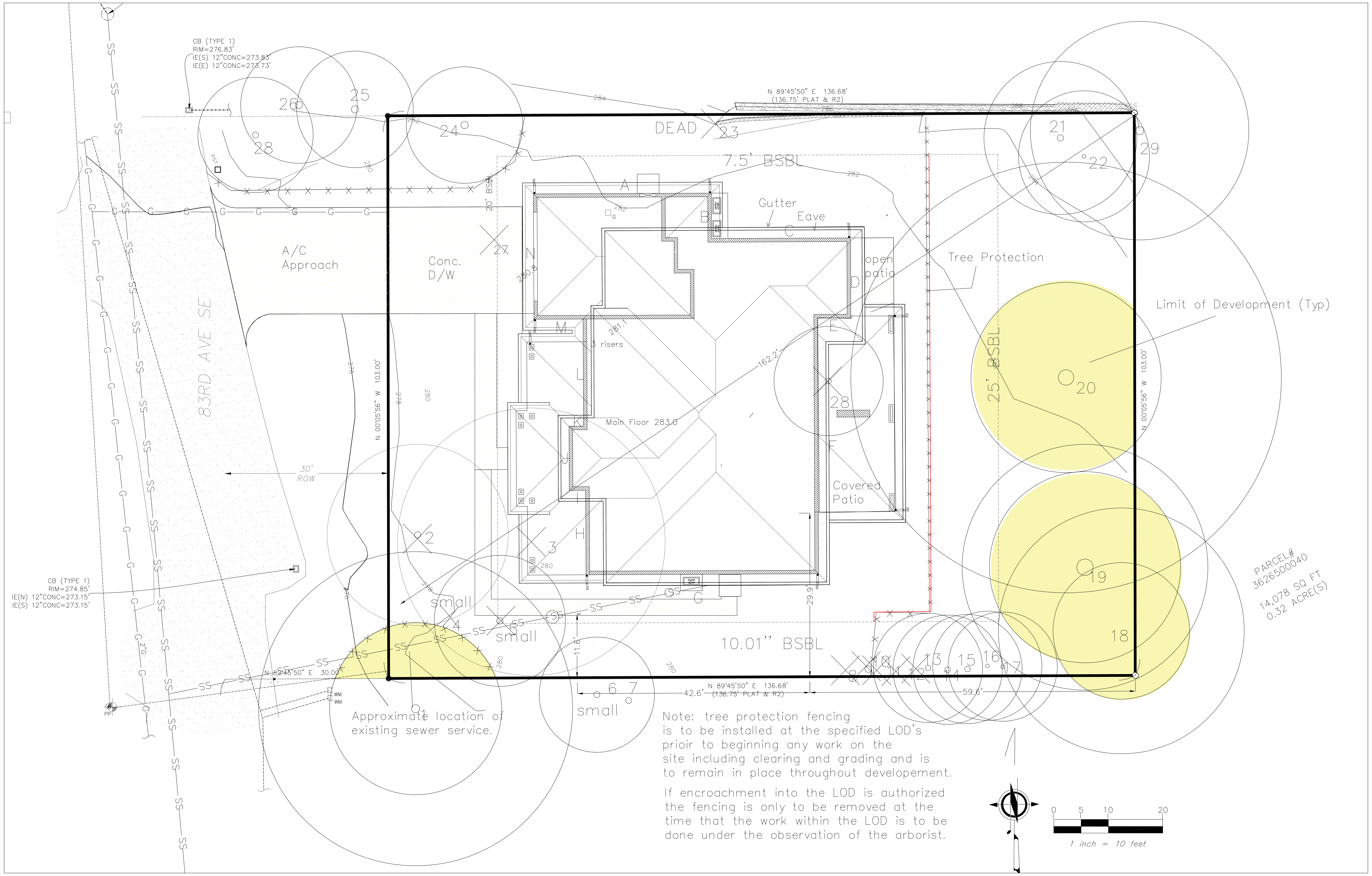
CB (TYPE 1)
RIM=276.83'
IE(S) 12"CONC=273.83'
IE(E) 12"CONC=273.73'
CB (TYPE 1)
RIM=274.85'
IE(N) 12"CONC=273.15'
IE(S) 12"CONC=273.15'
83RD AVE SE
30' ROW
A/C
Approach
Conc.
D/W
DEAD
N 89°45'50" E 136.68'
(136.75' PLAT & R2)
7.5' BSBL
20' BSBL
25' BSBL
10.01'' BSBL
Gutter
Eave
open patio
Tree Protection
Limit of Development (Typ)
Main Floor 283.0
3 risers
Covered
Patio
162.2'
N 00°05'56" W 103.00'
N 89°45'50" E 30.00'
Approximate location of
existing sewer service.
small
small
small
42.6'
59.6'
29.9'
11.6'
PARCEL# 3626500040
14,078 SQ FT
0.32 ACRE(S)
A
B
C
D
E
F
G
H
I
J
K
L
M
N
1
2
3
4
5
6
7
8
9
10
11
12
13
14
15
16
17
18
19
20
21
22
23
24
25
26
27
28
29
SS
G
WM
PP
0
5
10
20
1 inch = 10 feet

Note: tree protection fencing is to be installed at the specified LOD's prioir to beginning any work on the site including clearing and grading and is to remain in place throughout developement.

If encroachment into the LOD is authorized the fencing is only to be removed at the time that the work within the LOD is to be done under the observation of the arborist.

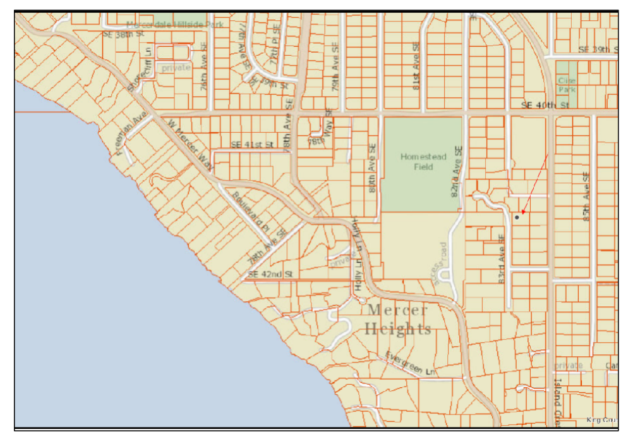

Vicinity Map

HEIGHT TABLE							
Loc.	El:	Length	Product	Loc.	El:	Length	Product
A	282.2	32.6	9,200	M	281.6	9	2,534
B	281.6	8.3	2,337	N	281.6	23	6,477
C	281.6	25.4	7,153				
D	281.6	14.7	4,140				
E	281.6	6	1,690				
F	281.6	46.5	13,094				-
G	279.6	43	12,023				
H	281.4	15.5	4,362				
I	281.6	3	845				
J	281.6	11.7	3,295				
K	281.6	2.6	732				
L	281.4	19.5	5,487				
Sub Totals		228.8	64,357			32	9,011
				Total	Length	261	
				Total	Products		73,368
AEG = Product/Length						ABE	281.3
Maximum Height					30		
Maximum Elevation					311.3		
Proposed Ridge Height					309.4		

GROSS FLOOR AREA		
Main Floor/Main Living	2,199	sf
ADU	370	sf
Main Floor Garage	587	sf
Total Main Floor	3,156	sf
Second Floor	2,556	sf
Second Floor Stair Deduction	(86)	sf
Total Second Floor	2,470	sf
Total GFA	5,626	sf
Allowable GFA 40%	5,631	sf
Proposed %	39.96%	

	LOT COVERAGE	
	Lot Area	14,078
	Allowed	40%
	Allowed sf	5,631
Existing		
	Eaves	3,720
	Driveway	1,195
	Total Existing	4,915
	Existing Removed	4,915
New		
	Eave Area	4,698
	Driveway	479
	Cov'd Patio	incl above
	New sf	5,177
Total		
	Total New and Existing	5,177
	%	36.8%

Hardscape	
Lot Area	14,078
EXISTING	
Uncovered Patios	136
Walkways	147
Total Existing	283
Existing Removed	283
Net Existing Retained	0
NEW	
Walkways	338
Uncovered Patio	66
Stoop and Compressors	15
Total New	419
Total New and Existing	419
Total Hardscape	2.98%

LOT SLOPE CALCULATION		
High Point El:	287.8	ft
Low Point El:	276.9	ft
Elevation Difference	10.9	ft
Distance	162.2	ft
% Slope	6.7%	

PARKING	
Covered	2 ea.
Driveway	2 ea.

	ONSITE			TREE TABLE			
ID	Species	Dbh	Dripline	Classification	Limit of Development LOD	RETAIN	REMOVE
2	Blue spruce	12	16	Significant	10		yes
3	Flowering cherry	14	24	Significant	14		yes
4	Laceleaf Maple	3	5	Small Tree	N/A		yes
5	Mugo Pine	5	8	Small Tree	N/A		yes
8	Leyland cypress	12	18	Significant	10		yes
9	Leyland cypress	5	8	Small Tree	N/A		yes
10	Leyland cypress	4	6	Small Tree	N/A		yes
11	Leyland cypress	4	6	Small Tree	N/A		yes
12	Leyland cypress	3	6	Small Tree	N/A		yes
13	Leyland cypress	10	12	Significant	10	yes	
14	Leyland cypress	10	14	Significant	10	yes	
15	Leyland cypress	10	14	Significant	10	yes	
16	Leyland cypress	6	8	Small Tree	10	yes	
17	Leyland cypress	6	8	Small Tree	10	yes	
18	Hawthorn	10	22	Exeptional	12	yes	
19	Douglas-fir	40	42	Exceptional	116	yes	
20	Big leaf maple	46.0	79	Exceptional	16	yes	
21	Douglas-fir	8	16	Small Tree	10	yes	
22	Douglas-fir	14	30	Significant	16	yes	
23	Goldenchain tree	18		Dead	N/A		yes
24	Vine Maple	10	18	Exceptional	10	yes	
27	Evergreen Magnolia	6	10	Small Tree	14		yes
28	Hawthorn	10	18	Exceptional	18	yes	
	OFFSITE						
1	Ponderosa Pine	18	28	Significant	15		
6	Saucer magnolia	7	16	Small Tree	10		
25	Leyland Cypress	10	18	Significant	10		
26	Leyland Cypress	10	18	Significant	10		

PROPERTY OWNER:
JayMarc Diamond, LLC
STREET ADDRESS:
4104 83rd Ave SE
PARCEL #
3626500040
ZONING R-9.6
FRONT YARD - 20'
REAR YARD 25'
SIDE YARD - 5'/15'
HEIGHT LIMIT
30' above average existing ground elevation to peak of roof
Lot Coverage
Maximum 40% of net lot area
Gross Floor Area
Maximum 40% of net lot area

JayMarc Homes, LLC
7525 SE 24th St, #487
Mercer Island, WA 98040
425 281 2706

Site Plan
4104 83rd Ave SE
Mercer Island

Drawn by
Gary Upper
2-20-24
7-26-24
10-16-24

A2.0

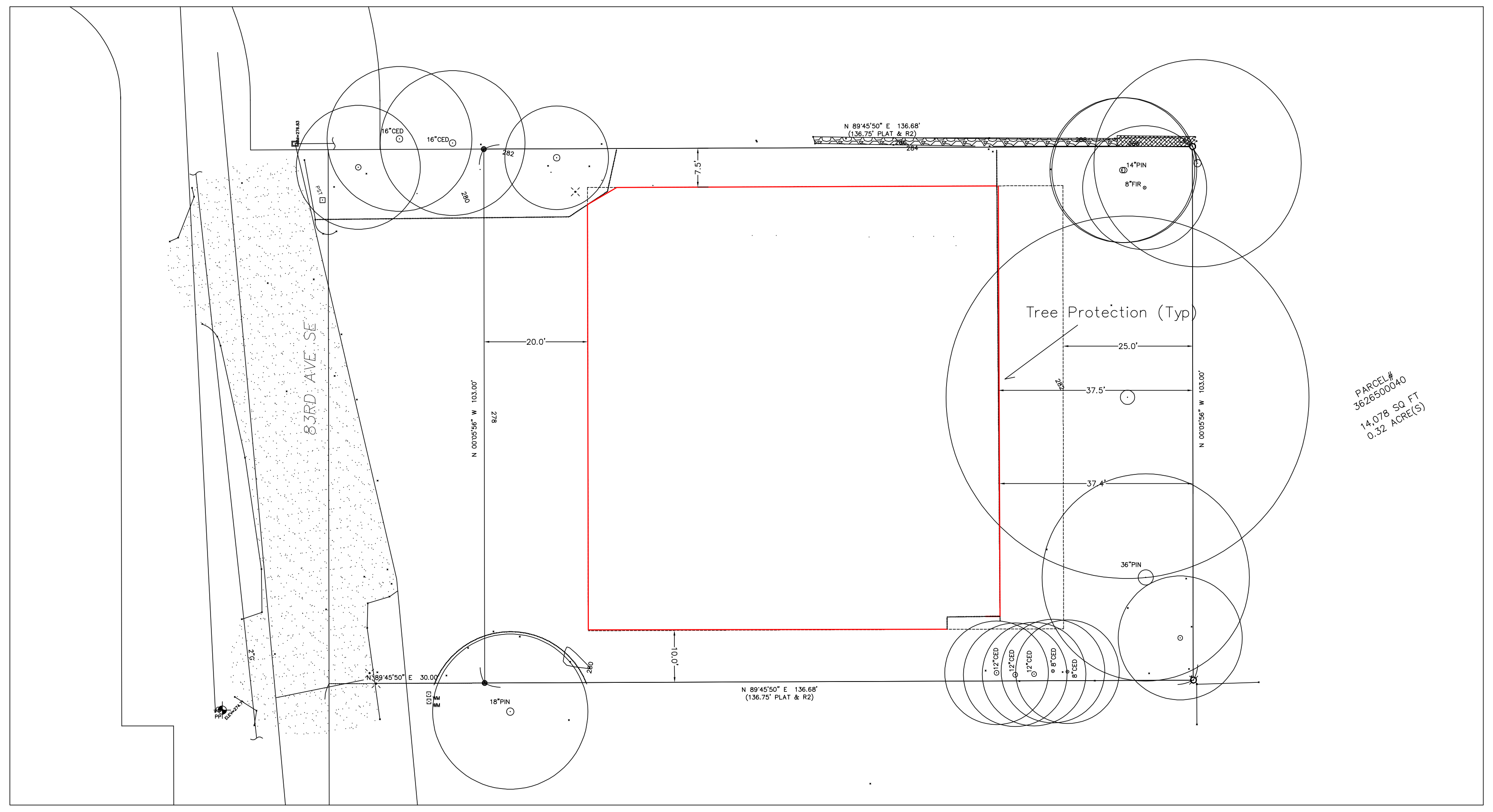
83RD AVE SE
16"CED
16"CED
18"PIN
14"PIN
8"FIR
36"PIN
12"CED
12"CED
12"CED
8"CED
8"CED
N 89°45'50" E 136.68'
(136.75' PLAT & R2)
N 89°45'50" E 30.00'
N 00°05'56" W 103.00'
7.5'
20.0'
10.0'
25.0'
37.5'
37.4'
Tree Protection (Typ)
PARCEL# 3626500040
14,078 SQ FT
0.32 ACRE(S)

BUILDING ENVELOPE

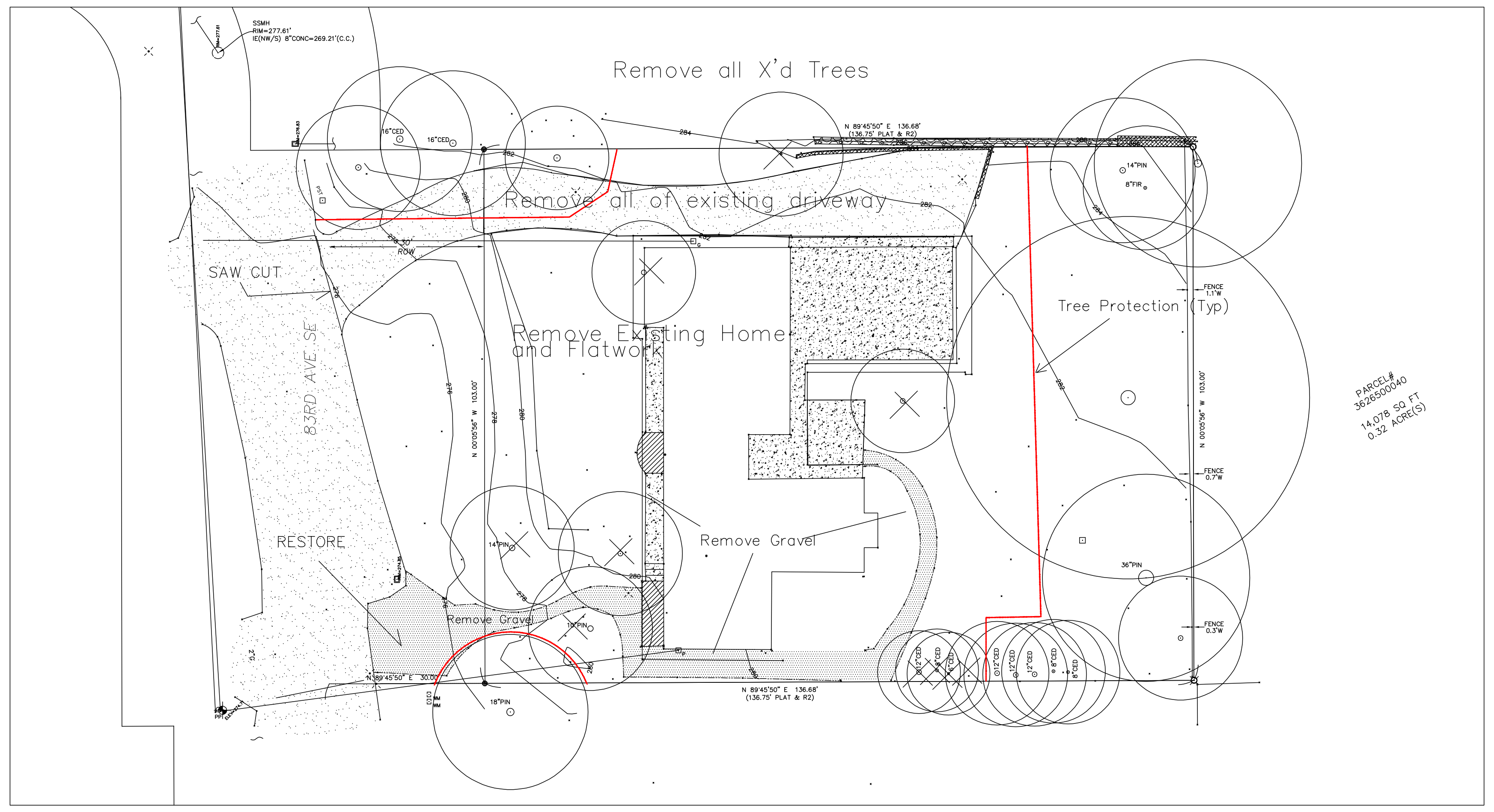
SSMH
RIM=277.61'
IE(NW/S) 8"CONC=269.21'(C.C.)
Remove all X'd Trees
Remove all of existing driveway
SAW CUT
Remove Existing Home and Flatwork
83RD AVE SE
RESTORE
Remove Gravel
Remove Gravel
Tree Protection (Typ)
16"CED
16"CED
14"PIN
10"PIN
18"PIN
14"PIN
8"FIR
36"PIN
12"CED
12"CED
12"CED
8"CED
8"CED
FENCE 1.1'W
FENCE 0.7'W
FENCE 0.3'W
N 89°45'50" E 136.68'
(136.75' PLAT & R2)
N 89°45'50" E 30.00'
N 00°05'56" W 103.00'
30' ROW
PARCEL# 3626500040
14,078 SQ FT
0.32 ACRE(S)

DEMOLITION PLAN

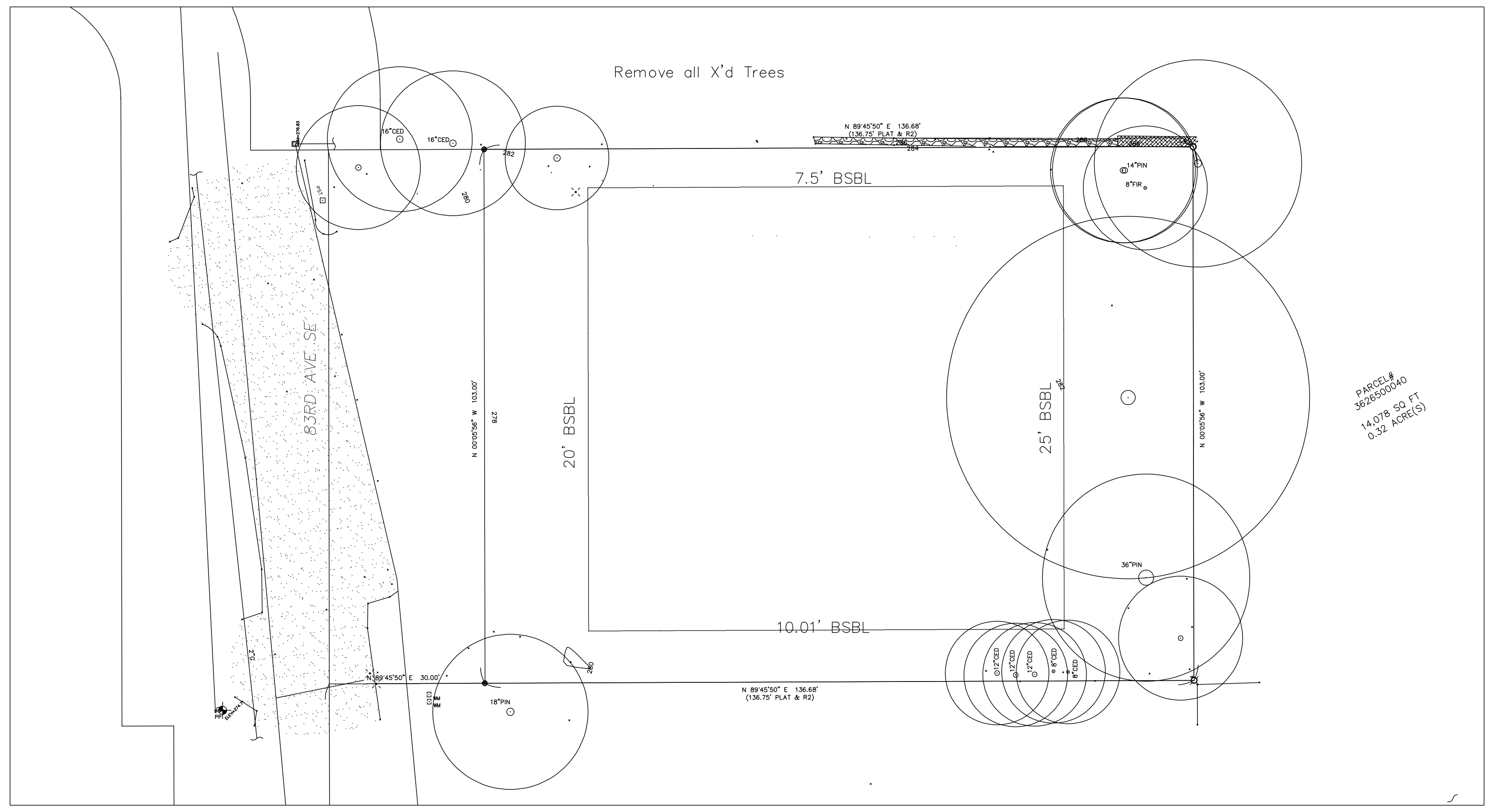
Remove all X'd Trees
83RD AVE SE
7.5' BSBL
20' BSBL
25' BSBL
10.01' BSBL
16"CED
16"CED
18"PIN
14"PIN
8"FIR
36"PIN
12"CED
12"CED
12"CED
8"CED
8"CED
N 89°45'50" E 136.68'
(136.75' PLAT & R2)
N 89°45'50" E 30.00'
N 00°05'56" W 103.00'
PARCEL# 3626500040
14,078 SQ FT
0.32 ACRE(S)

BUILDING SETBACKS

JayMarc Homes, LLC
7525 SE 24th St, #487
Mercer Island, WA 98040
425 281 2706

Demolition Plan
4104 83rd Ave SE
Mercer Island

Drawn by
Gary Upper
8-16-24

A2.1

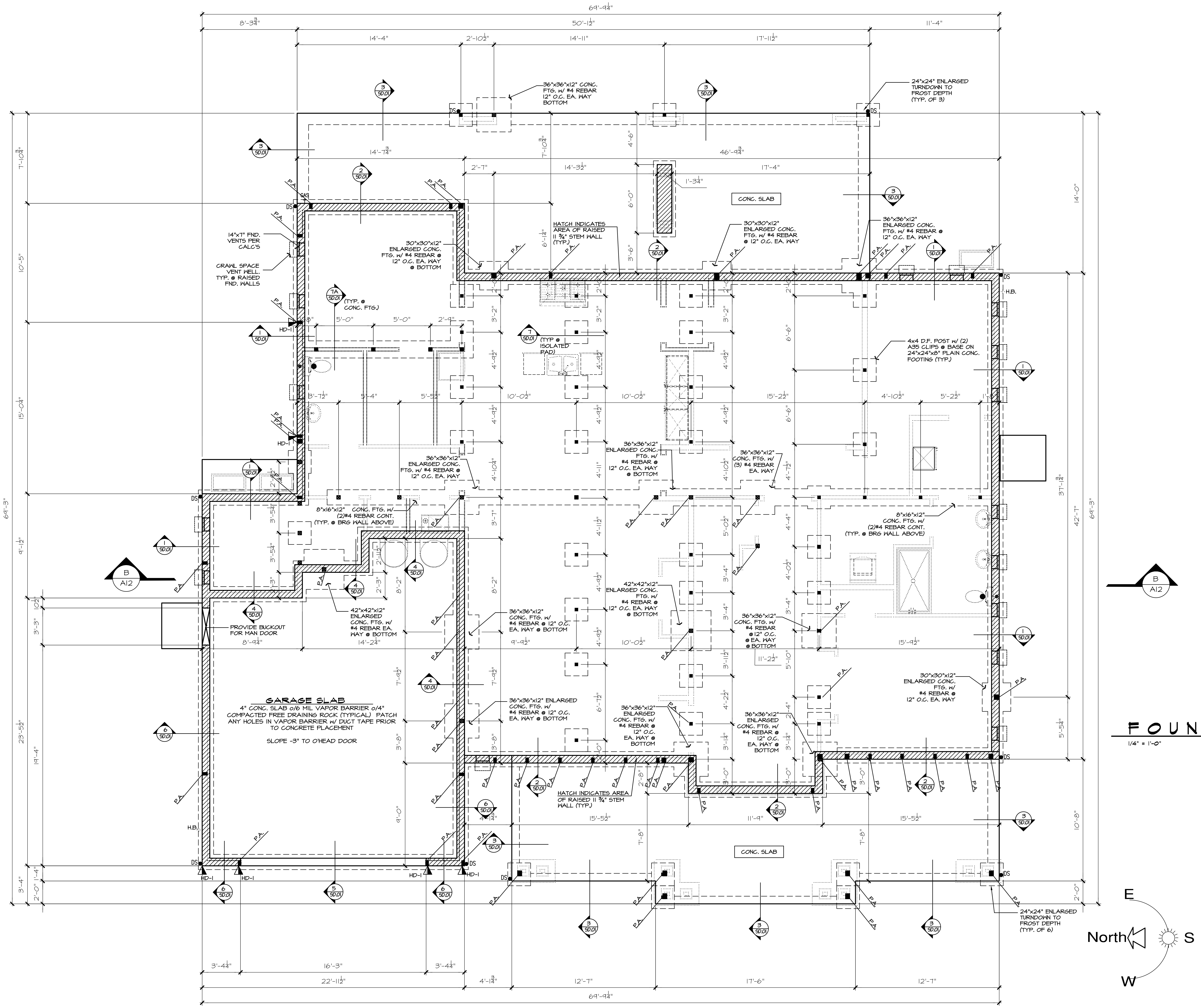
69'-9¼"
8'-3¾"
50'-1½"
11'-4"
14'-4"
2'-10½"
14'-11"
17'-11½"
36"x36"x12" CONC. FTG. w/ #4 REBAR 12" O.C. EA. WAY BOTTOM
24"x24" ENLARGED TURNDOWN TO FROST DEPTH (TYP. OF 3)
14'-7¾"
46'-9¾"
2'-7"
14'-3½"
17'-4"
1'-3¼"
CONC. SLAB
14"x7" FND. VENTS PER CALC'S
CRAWL SPACE VENT WELL. TYP. @ RAISED FND. WALLS
30"x30"x12" ENLARGED CONC. FTG. w/ #4 REBAR @ 12" O.C. EA. WAY @ BOTTOM
HATCH INDICATES AREA OF RAISED 11 ¾" STEM WALL (TYP.)
30"x30"x12" ENLARGED CONC. FTG. w/ #4 REBAR @ 12" O.C. EA. WAY
36"x36"x12" ENLARGED CONC. FTG. w/ #4 REBAR @ 12" O.C. EA. WAY
(TYP. @ CONC. FTG.)
(TYP @ ISOLATED PAD)
4x4 D.F. POST w/ (2) A35 CLIPS @ BASE ON 24"x24"x8" PLAIN CONC. FOOTING (TYP.)
36"x36"x12" ENLARGED CONC. FTG. w/ #4 REBAR @ 12" O.C. EA. WAY @ BOTTOM
36"x36"x12" CONC. FTG. w/ (3) #4 REBAR EA. WAY
8"x16"x12" CONC. FTG. w/ (2)#4 REBAR CONT. (TYP. @ BRG WALL ABOVE)
42"x42"x12" ENLARGED CONC. FTG. w/ #4 REBAR EA. WAY @ BOTTOM
42"x42"x12" ENLARGED CONC. FTG. w/ #4 REBAR @ 12" O.C. EA. WAY @ BOTTOM
36"x36"x12" CONC. FTG. w/ #4 REBAR @ 12" O.C. EA. WAY @ BOTTOM
36"x36"x12" CONC. FTG. w/ #4 REBAR @12" O.C. @ EA. WAY @ BOTTOM
36"x36"x12" ENLARGED CONC. FTG. w/ #4 REBAR @ 12" O.C. EA. WAY @ BOTTOM
36"x36"x12" ENLARGED CONC. FTG. w/ #4 REBAR @ 12" O.C. EA. WAY @ BOTTOM
PROVIDE BUCKOUT FOR MAN DOOR
GARAGE SLAB
4" CONC. SLAB o/6 MIL VAPOR BARRIER o/4" COMPACTED FREE DRAINING ROCK (TYPICAL) PATCH ANY HOLES IN VAPOR BARRIER w/ DUCT TAPE PRIOR TO CONCRETE PLACEMENT
SLOPE -3" TO O'HEAD DOOR
HATCH INDICATES AREA OF RAISED 11 ¾" STEM WALL (TYP.)
24"x24" ENLARGED TURNDOWN TO FROST DEPTH (TYP. OF 6)
HD-1
DS
GAS
H.B.
P.A.
SD.01
B
A12
3'-4¼"
16'-3"
22'-11½"
4'-1¾"
12'-7"
17'-6"
15'-5½"
11'-9"
E
North
S
W

F O U N D A T I O N   P L A N

1/4" = 1'-0"

HOLD-DOWN SCHEDULE

SYMBOL	SPECIFICATION
HD-1	SIMPSON STHD14 (RJ) HOLD-DOWN
HD-5	SIMPSON CS16 STRAP TIE (14" END LENGTH)
HD-6	SIMPSON MSTC40 STRAP TIE (12" END LENGTH)
HD-7	SIMPSON MSTC66 STRAP TIE (24" END LENGTH)

LEGEND

┄┄┄	INTERIOR BEARING WALL
▭	EXTERIOR WALL ABOVE
⅃L	METAL HANGER
⁎	INDICATES POST ABOVE. PROVIDE SOLID BLOCKING UNDER POST OR JAMB ABOVE.
◣	INDICATES HOLDOWN.

4x10 DROPPED CONT. B22 & B23 BEAM (TYP. U.N.O.)

REFER TO S-0.0 FOR TYPICAL STRUCTURAL NOTES & SCHEDULES

TYP. CRAWLSPACE POSTS:

4x4 D.F. POST w/ 2x4 CLEATS EA. SIDE + (2) A35 CLIPS ON EA. SIDE @ BASE OF POST w/ ¼" x 1 ½" LONG REDHEAD NAILS (4'-0" MAX. POST HEIGHT) ON #90 FELT OR ASPHALT SHINGLE ON 24"x24"x8" PLAIN CONC. FTG. (TYP. U.N.O.)

JAYMARC
HOMES
7525 SE 24th St., 487
Mercer Island, WA
98040
425.266.9100

△ Issue Issue Date By
Description
△
08.27.24
CITY PLAN REVIEW COMMENTS

4104 83rd Ave SE
MERCER ISLAND, WA.
Job Number:
MIS075

plan name: --
marketing name: ASTORIA
plan number: MIS075
mark sys. number:--

Conditions not specifically represented graphically or in writing or which conflict with the current International Residential Code (IRC.) or those of the local municipality then the current standards and requirements of each respectively shall govern.

The drawings in this set are instruments of service and shall remain the property of JayMarc Homes, LLC.

02.21.24
Submittal Date

Sheet Title/Description

JAYMARC HOMES
Design Firm

R.R.
Drawn by:

R.R./ S.K.
Checked by:

Primary Scale

A3
of: .

Sheet Title/Description

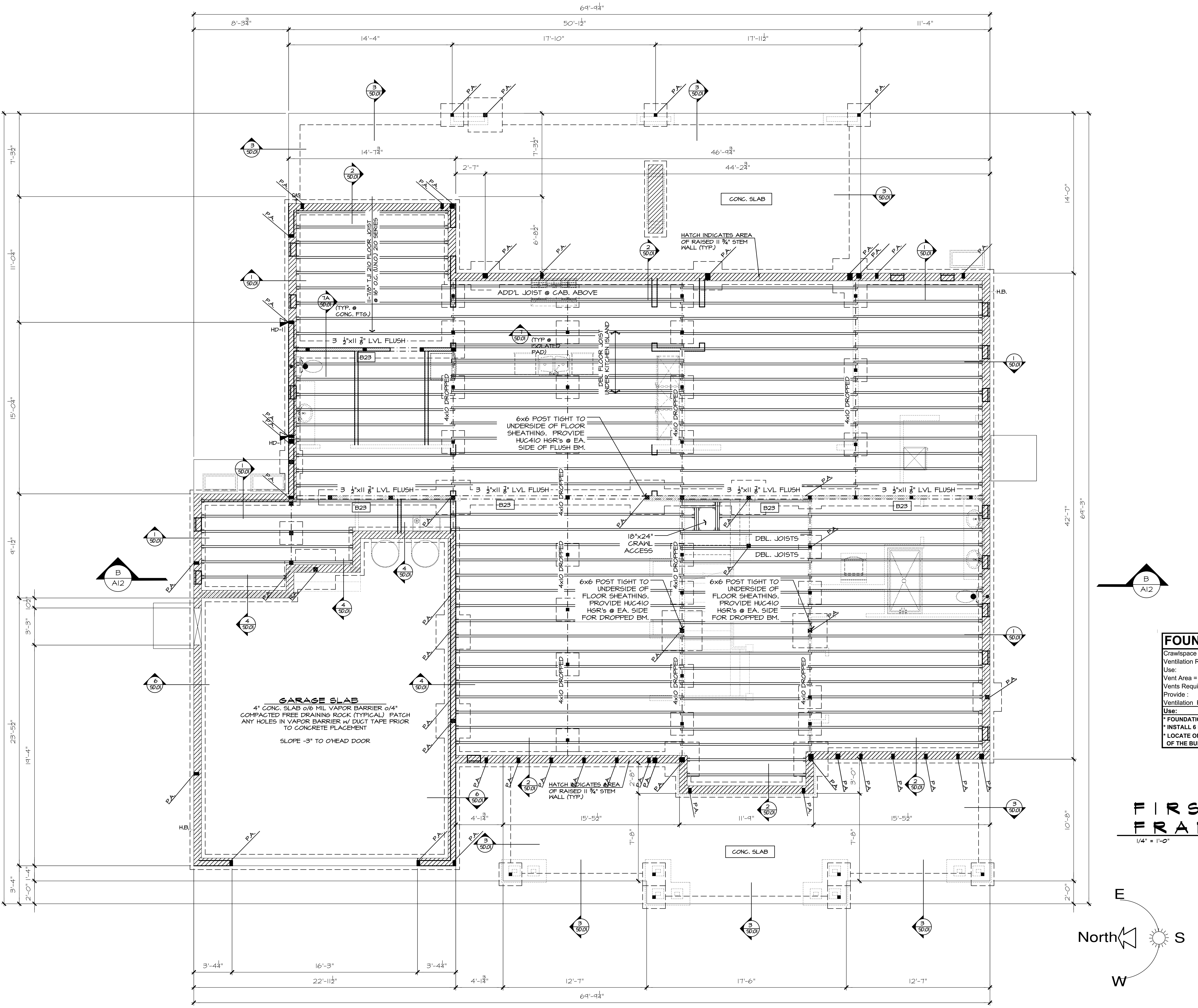
69'-9¼"
8'-3¾"
50'-1½"
11'-4"
14'-4"
17'-10"
17'-11½"
14'-7¾"
46'-9¾"
2'-7"
44'-2¾"
7'-3½"
11'-0¼"
15'-0¼"
9'-1½"
23'-5½"
19'-4"
3'-3"
3'-4"
2'-0"
1'-4"
14'-0"
42'-7"
69'-3"
10'-8"
2'-0"
CONC. SLAB
HATCH INDICATES AREA OF RAISED 11 ¾" STEM WALL (TYP.)
ADD'L JOIST @ CAB. ABOVE
11-7/8" TJI 210 FLOOR JOIST @ 16" O.C. (U.N.O.) 210 SERIES
(TYP. @ CONC. FTG.)
(TYP @ ISOLATED PAD)
DBL. FLOOR JOIST UNDER KITCHEN ISLAND
3 ½"x11 ⅞" LVL FLUSH
B23
4x10 DROPPED
6x6 POST TIGHT TO UNDERSIDE OF FLOOR SHEATHING. PROVIDE HUC410 HGR's @ EA. SIDE OF FLUSH BM.
18"x24" CRAWL ACCESS
DBL. JOISTS
6x6 POST TIGHT TO UNDERSIDE OF FLOOR SHEATHING. PROVIDE HUC410 HGR's @ EA. SIDE FOR DROPPED BM.
GARAGE SLAB
4" CONC. SLAB o/6 MIL VAPOR BARRIER o/4" COMPACTED FREE DRAINING ROCK (TYPICAL) PATCH ANY HOLES IN VAPOR BARRIER w/ DUCT TAPE PRIOR TO CONCRETE PLACEMENT
SLOPE -3" TO O'HEAD DOOR
HD-1
H.B.
PA
B A12
3'-4¼"
16'-3"
3'-4¼"
22'-11½"
4'-1¾"
12'-7"
17'-6"
12'-7"
15'-5½"
11'-9"
15'-5½"
7'-8"
3'-0"
2'-8"
E
North
S
W

FIRST FLOOR FRAMING PLAN

1/4" = 1'-0"

HOLD-DOWN SCHEDULE

SYMBOL	SPECIFICATION
HD-1	SIMPSON STHD14 (RJ) HOLD-DOWN
HD-5	SIMPSON CS16 STRAP TIE (14" END LENGTH)
HD-6	SIMPSON MSTC40 STRAP TIE (12" END LENGTH)
HD-7	SIMPSON MSTC66 STRAP TIE (24" END LENGTH)

LEGEND

J.L.	METAL HANGER
*	INDICATES POST ABOVE. PROVIDE SOLID BLOCKING UNDER POST OR JAMB ABOVE.
▶	INDICATES HOLDOWN.

INDICATES 11-7/8" TJI FLOOR JOISTS @ 16" O.C. 210 SERIES (TYP. U.N.O.)

REFER TO S-0.0 FOR TYPICAL STRUCTURAL NOTES & SCHEDULES

4x10 DROPPED B22 & B23 CONT. BEAM (TYP. U.N.O.)

TYP. CRAWLSPACE POSTS:

4x4 D.F. POST w/ 2x4 CLEATS EA. SIDE + (2) A35 CLIPS ON EA. SIDE @ BASE OF POST w/ ¼" x 1 ½" LONG REDHEAD NAILS (4'-0" MAX. POST HEIGHT) ON #90 FELT OR ASPHALT SHINGLE ON 24"x24"x8" PLAIN CONC. FTG. (TYP. U.N.O.)

FOUNDATION VENTILATION

Crawlspace Area:		2695	s.f.	
Ventilation Required:		2695	s.f. / 300 =	1293.6 s.i. Req'd
Use:		14" x 7"	Foundation Vents	
Vent Area =		98	s.i. - 25% reduct.,1/4"mesh =	73.5 s.i.
Vents Required =		1293.6	s.i. / Vent Area =	17.60 s.i.
Provide :	18	14" x 7"	Vents, Area =	1323 s.i.
Ventilation Provided =		1323.00	s.i. is Greater than	1293.6 s.i. Req'd
Use:	**18**	**14" x 7"**	**Foundation Vents**	

*** FOUNDATION VENTS SHALL NOT INTERFERE WITH DIRECT LOAD PATH OF COLUMNS**
*** INSTALL 6 MIL BLACK POLYETHYLENE VAPOR RETARDER GROUND COVER**
*** LOCATE ONE VENT WITHIN 3 FEET OF EACH CORNER OF THE BUILDING, EXCEPT ONE SIDE OF THE BUILDING SHALL BE PERMITTED TO HAVE NO VENTS.**

JAYMARC HOMES

7525 SE 24th St., 487
Mercer Island, WA
98040
425.266.9100

△ Issue	Issue Date	By	Description
△	.	.	.
.	08.27.24	.	CITY PLAN REVIEW COMMENTS
.	.	.	.
.	.	.	.

4104 83rd Ave SE
MERCER ISLAND, WA.

Job Number:
MIS075

plan name: --
marketing name: ASTORIA
plan number: MIS075
mark sys. number: --

Conditions not specifically represented graphically or in writing or which conflict with the current International Residential Code (IRC.) or those of the local municipality then the current standards and requirements of each respectively shall govern.

The drawings in this set are instruments of service and shall remain the property of JayMarc Homes, LLC.

Submittal Date: 02.21.24
Sheet Title/Description: .
Design Firm: JAYMARC HOMES
Drawn by: R.R.
Checked by: R.R./ S.K.
Primary Scale: .

Sheet Title/Description

A4
of: .

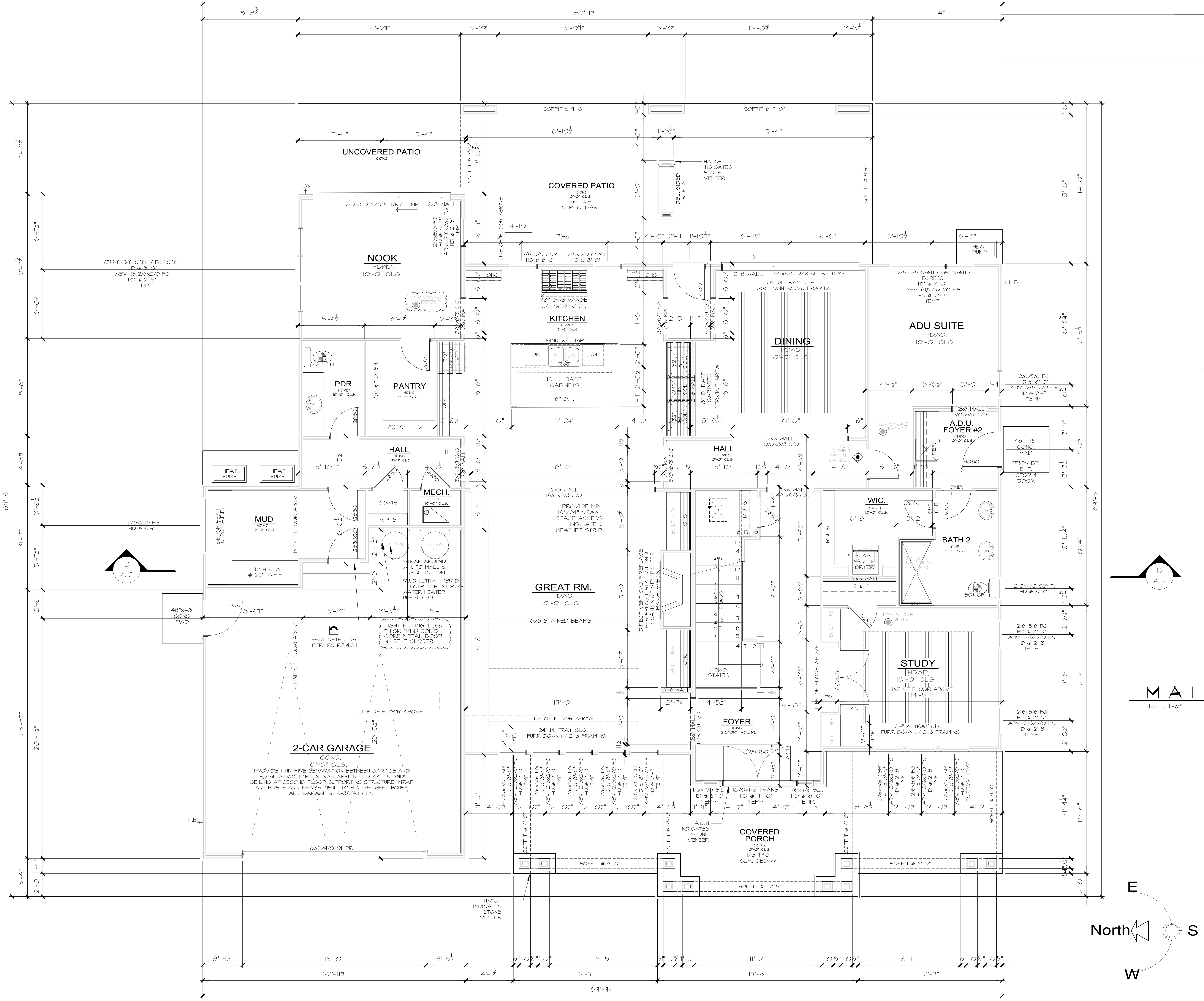
69'-9¼"
50'-1½"
UNCOVERED PATIO
CONC.
COVERED PATIO
CONC.
10'-0" CLG.
1x6 T&G
CLR. CEDAR
HATCH INDICATES STONE VENEER
NOOK
HDWD.
10'-0" CLG.
KITCHEN
48" GAS RANGE w/ HOOD (VTO)
SINK w/ DISP.
18" D. BASE CABINETS
16" O.H.
DINING
24" W. TRAY CLG.
FURR DOWN w/ 2x6 FRAMING
ADU SUITE
HDWD.
10'-0" CLG.
PDR.
PANTRY
HALL
MECH.
MUD
HEAT PUMP
COATS
A.D.U. FOYER #2
WIC.
BATH 2
STACKABLE WASHER/ DRYER
GREAT RM.
HDWD.
10'-0" CLG.
6x6 STAINED BEAMS
PROVIDE MIN. 18"x24" CRAWL SPACE ACCESS. INSULATE & WEATHER STRIP
STRAP AROUND W.H. TO WALL @ TOP & BOTTOM
RUUD ULTRA HYBRID ELECTRIC/ HEAT PUMP WATER HEATER. UEF 3.5-3.7
TIGHT FITTING, 1-3/8" THICK (MIN.) SOLID CORE METAL DOOR w/ SELF CLOSER
HEAT DETECTOR PER IRC R314.2.1
STUDY
HDWD.
10'-0" CLG.
FOYER
HDWD.
2 STORY VOLUME
HDWD STAIRS
2-CAR GARAGE
CONC.
10'-0" CLG.
PROVIDE 1 HR FIRE SEPARATION BETWEEN GARAGE AND HOUSE W/5/8" TYPE 'X' GWB APPLIED TO WALLS AND CEILING AT SECOND FLOOR SUPPORTING STRUCTURE; WRAP ALL POSTS AND BEAMS INSUL. TO R-21 BETWEEN HOUSE AND GARAGE w/ R-38 AT CLG.
16/0x9/0 OHDR
COVERED PORCH
CONC.
10'-0" CLG.
1x6 T&G
CLR. CEDAR
LINE OF FLOOR ABOVE
SOFFIT @ 9'-0"
SOFFIT @ 10'-6"
48"x48" CONC. PAD
B
A12
North
E
S
W

MAIN FLOOR PLAN

1/4" = 1'-0"

MAIN FLOOR PLAN NOTES

PLAN SPECIFIC 2018 WSEC. SECTION R06

R406.2 ADDITIONAL ENERGY EFFICIENCY REQUIREMENTS (MANDATORY).

THIS RESIDENTIAL DWELLING SHALL COMPLY w/SUFFICIENT OPTIONS FROM TABLE R406.2 TO ACHIEVE THE FOLLOWING MIN. NUMBER OF CREDITS:

6 FOR a 1,501sf to 4,999sf HOME.

CREDITS PROVIDED IN THIS HOME AS FOLLOWS:

EFFICIENT BUILDING ENVELOPE OPT. 1.3: 0.5 CREDITS

PRESCRIPTIVE COMPLIANCE IS BASED ON TABLE R402.1.1 with FOLLOWING MODIFICATIONS:

VERTICAL FENESTRATION U = 0.28 WINDOWS

FLOORS TO BE R-38 and SLAB ON GRADE TO BE R-10 PERIMETER and UNDER ENTIRE SLAB BELOW GRADE.

HIGH EFFICIENCY HVAC EQUIPMENT OPT. 3.5a: 1.5 CREDITS

AIR-SOURCE, CENTRALLY DUCTED HEAT PUMP WITH MINIMUM HSPF OF 11.0. TO QUALIFY TO CLAIM THIS CREDIT, THE BUILDING PERMIT DRAWINGS SHALL SPECIFY THE OPTION BEING SELECTED AND SHALL SPECIFY THE HEATING EQUIPMENT EFFICIENCY. EXTERIOR LOCATED EQUIPMENT SHOULD ALSO BE REPRESENTED ON SITE PLAN.

HIGH EFFICENCY HVAC DISTRIBUTION OPT. 4.2: 1.0 CREDITS

HVAC EQUIPMENT AND ASSOCIATED DUCT SYSTEMS(S) SHALL COMPLY WITH THE REQUIREMENTS OF SECT R403.3.7. LOCATING SYSTEM COMPONENTS IN CONDITIONED CRAWL SPACES IS NOT PERMITTED UNDER THIS OPTION. ELECTRIC RESISTANCE HEAT AND DUCTLESS HEAT PUMPS ARE NOT PERMITTED UNDER THIS OPTION. DIRECT COMBUSTION HEATING EQUIPMENT WITH AFUE LESS THAN 80% IS NOT PERMITTED UNDER THIS OPTION.

EFFICIENT WATER HEATING 5.5: 2.0 CREDITS

WATER HEATING SYSTEMS SHALL INCLUDE ONE OF THE FOLLOWING: ELECTRIC HEAT PUMP WATER HEATER MEETING THE STANDARDS FOR TIER III OF NEEA'S ADVANCED WATER HEATING SPECIFICATION.

TO QUALIFY TO CLAIM THIS CREDIT, THE BUILDING PERMIT DRAWINGS SHALL SPECIFY THE OPTION BEING SELECTED AND SHALL SPECIFY THE WATER HEATER EQUIPMENT TYPE AND THE MINIMUM EQUIPMENT EFFICIENCY.

WHOLE HOUSE VENTILATION

PROVIDE WHOLE HOUSE VENTILATION per 2018 IRC. M1505.4.3(1) and IMC R403.8. THE WHOLE-HOUSE MECHANICAL VENTILATION SYSTEM SHALL PROVIDE OUTDOOR AIR AT A CONTINUOUS RATE AS DETERMINED IN ACCORDANCE WITH TABLE M1505.4.3(1) OR EQUATION 15.

SYMBOL	LOCATION	MIN. FAN REQUIREMENTS (ALL FANS VENT TO OUTDIDE)
◐ A. 50cfm+	BATH & POWDER	Min. 50cfm. INTERMITTENT at .025wg per TABLE M1507.4
◑ A. 100cfm+	KITCHEN	Min. 100cfm. INTERMITTENT at .025wg per TBL. M1507.4
	RANGE HOOD or DOWN DRAFT EXHAUST FAN RATED at min. 100cfm. at 0.10wg MAY BE USED FOR EXHAUST FAN REQMT. EXHAUST HOODS IN EXCESS OF 400cfm. SHALL BE INTERLOCKED AND PROVIDE MAKE UP AIR per w/M1503.4	
◐ C. 143cfm+ WHF.	LAUNDRY ROOM	MIN. 360cfm. INTERMITTENT at .025wg TO FUNCTION AS WHOLE HOUSE FAN (WHF.)

MECHANICAL CONTRACTOR TO SIZE WHF. FAN and SET OPERATING TIMER per TABLE M1507.3.3(1) FOR A 4,501-5,000sf. DWELLING w/ 5 OR MORE BEDRMS. TO OPERATE INTERMITTENTLY and CONTINUOUSLY per TABLE M1507.3.3(2)

PROVIDE CONTROLS FOR WHF. per M1507.3.2 AFFIX LABEL TO CONTROLS THAT READS "WHOLE HOUSE VENTILATION - SEE OPERATING INSTRUCTIONS"

G.F.A. CALCULATIONS:

SQUARE FOOTAGE SUMMARY

MAIN FLOOR/ MAIN LIVING	2,199	S.F.
A.D.U.	370	S.F.
GARAGE	587	S.F.
SUB TOTAL	3,156	S.F.
UPPER FLOOR/ MAIN LIVING	2,556	S.F.
MINUS MAIN STAIRS	-86	S.F.
SUB TOTAL	2,470	S.F.
TOTAL G.F.A.	5,626	S.F.
ALLOWABLE F.A.R. 40%	5,631	S.F.
PROPOSED	39.96	%.

Updated : 03/09/2018

Method for Calculating Square Footage - ANSI Z765-2013 except: no separate distinction of 'above-grade or below-grade' areas and each level is measured to the outside of studs not the exterior finished surface.

Square footage calculations for this house were made based on plan dimensions only and may vary from the finished square footage of the house as built.

See Sheet "CODES" for additional Zoning required Area Calculations

JAYMARC HOMES

7525 SE 24th St., 487
Mercer Island, WA
98040
425.266.9100

△ Issue Issue Date By
Description
△

08.27.24
CITY PLAN REVIEW COMMENTS

4104 83rd Ave SE
MERCER ISLAND, WA.

Job Number:
MIS075

plan name: --
marketing name: ASTORIA
plan number: MIS075
mark sys. number: --

Conditions not specifically represented graphically or in writing or which conflict with the current International Residential Code (IRC.) or those of the local municipality then the current standards and requirements of each respectively shall govern.

The drawings in this set are instruments of service and shall remain the property of JayMarc Homes, LLC.

02.21.24
Submittal Date

Sheet Title/Description

JAYMARC HOMES
Design Firm

R.R.
Drawn by:

R.R./ S.K.
Checked by:

Primary Scale

Sheet Title/Description

A5

of: .

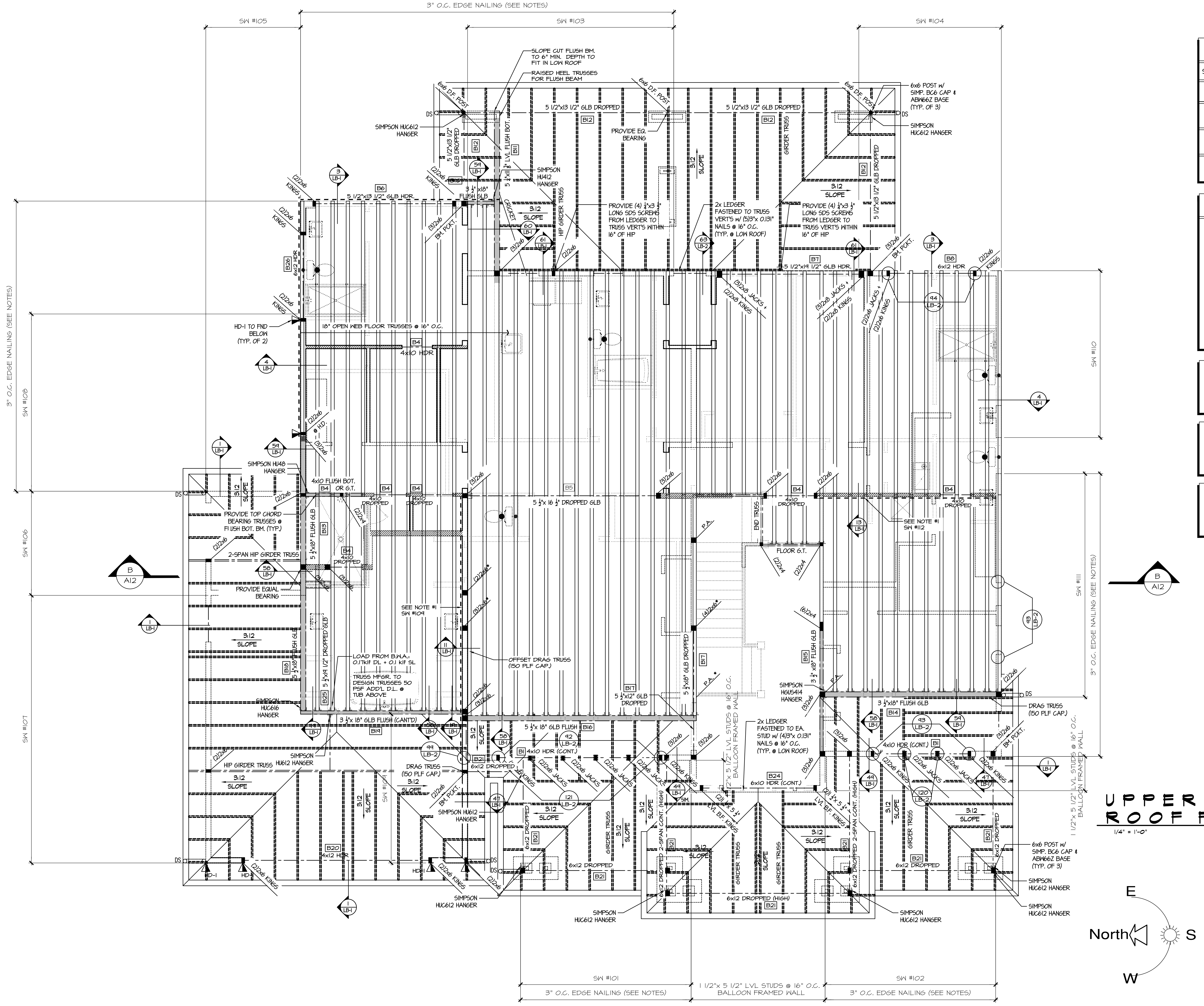
3" O.C. EDGE NAILING (SEE NOTES)
SW #105
SW #103
SW #104
SLOPE CUT FLUSH BM. TO 6" MIN. DEPTH TO FIT IN LOW ROOF
RAISED HEEL TRUSSES FOR FLUSH BEAM
6x6 D.F. POST
5 1/2"x13 1/2" GLB DROPPED
B12
6x6 POST w/ SIMP. BC6 CAP & ABW66Z BASE (TYP. OF 3)
SIMPSON HUC612 HANGER
PROVIDE EQ. BEARING
3:12 SLOPE
GIRDER TRUSS
SIMPSON HU412 HANGER
HIP GIRDER TRUSS
PROVIDE (4) ¼"x3 ½" LONG SDS SCREWS FROM LEDGER TO TRUSS VERTS WITHIN 16" OF HIP
2x LEDGER FASTENED TO TRUSS VERT'S w/ (5)3"x 0.131" NAILS @ 16" O.C. (TYP. @ LOW ROOF)
5 1/2"x13 1/2" GLB HDR.
B6
3 ½"x18" FLUSH GLB
(2)2x6 KINGS
(3)2x6 BM. PCKT.
B7
5 1/2"x19 1/2" GLB HDR.
B8
6x12 HDR
(3)2x8 JACKS + (2)2x8 KINGS
B26
6x12 HDR
HD-1 TO FND BELOW (TYP. OF 2)
18" OPEN WEB FLOOR TRUSSES @ 16" O.C.
B4
4x10 HDR
SW #108
3" O.C. EDGE NAILING (SEE NOTES)
SW #110
SIMPSON HU48 HANGER
4x10 FLUSH BOT. OR G.T.
4x10 DROPPED
5 ¼"x 16 ½" DROPPED GLB
B5
PROVIDE TOP CHORD BEARING TRUSSES @ FLUSH BOT. BM. (TYP.)
2-SPAN HIP GIRDER TRUSS
5 ¼"x18" FLUSH GLB
B13
PROVIDE EQUAL BEARING
SEE NOTE #1 SW #109
SEE NOTE #1 SW #112
END TRUSS
FLOOR G.T.
P.A.
SW #106
LOAD FROM B.W.A. 0.17kif DL + 0.1 kif SL
TRUSS MFGR. TO DESIGN TRUSSES 50 PSF ADD'L D.L. @ TUB ABOVE
5 ¼"x19 1/2" DROPPED GLB
B16
B25
OFFSET DRAG TRUSS (150 PLF CAP.)
5 ¼"x18" GLB DROPPED
B17
5 ¼"x12" GLB DROPPED
SIMPSON HGUS414 HANGER
3 ½"x18" FLUSH GLB
B15
B14
DRAG TRUSS (150 PLF CAP.)
SW #111
3" O.C. EDGE NAILING (SEE NOTES)
SIMPSON HUC616 HANGER
3 ½"x 18" GLB FLUSH (CONT'D)
B14
5 ¼"x 18" GLB FLUSH
B16
4x10 HDR (CONT.)
SIMPSON HU612 HANGER
HIP GIRDER TRUSS
DRAG TRUSS (150 PLF CAP.)
6x12 DROPPED
B21
2x LEDGER FASTENED TO EA. STUD w/ (4)3"x 0.131" NAILS @ 16" O.C. (TYP. @ LOW ROOF)
B24
6x10 HDR (CONT.)
1 1/2"x 5 1/2" LVL STUDS @ 16" O.C. BALLOON FRAMED WALL
LVL B.F. KINGS
SW #107
B20
4x12 HDR
HD-1
6x12 DROPPED (HIGH)
2-SPAN CONT. (HIGH)
SIMPSON HUC612 HANGER
SW #101
SW #102
3" O.C. EDGE NAILING (SEE NOTES)
1 1/2"x 5 1/2" LVL STUDS @ 16" O.C. BALLOON FRAMED WALL
DS
B A12
LB-1
LB-2
E
North
S
W

UPPER FLOOR & LOWER ROOF FRAMING PLAN

1/4" = 1'-0"

HOLD-DOWN SCHEDULE

SYMBOL	SPECIFICATION
HD-1	SIMPSON STHD14 (RJ) HOLD-DOWN
HD-5	SIMPSON CS16 STRAP TIE (14" END LENGTH)
HD-6	SIMPSON MSTC40 STRAP TIE (12" END LENGTH)
HD-7	SIMPSON MSTC66 STRAP TIE (24" END LENGTH)

LEGEND

▨	INTERIOR BEARING WALL
═	BEAM / HEADER
—	18" FLOOR TRUSS @ 16" O.C. (U.N.O.)
- - -	INTERIOR SHEAR WALL PANEL OR EXTERIOR SHEAR WALL w/ 3" o.c. EDGE NAILING
⅃L	METAL HANGER
✳	INDICATES POST ABOVE. PROVIDE SOLID BLOCKING UNDER POST OR JAMB ABOVE.
◀	INDICATES HOLDOWN.

REFER TO S-0.0 FOR TYPICAL STRUCTURAL NOTES & SCHEDULES

4x10 HDR @ ALL EXT. B1 WINDOWS/DOORS (TYP. U.N.O.)

NOTE #1:
PROVIDE 7/16" OSB/PLYWOOD SHTG. FASTEN PER TYP. WALL SHTG. SPEC'S (SEE NOTES)

JAYMARC HOMES

7525 SE 24th St., 487
Mercer Island, WA
98040
425.266.9100

△ Issue Issue Date By
Description
△ 08.27.24
CITY PLAN REVIEW COMMENTS

4104 83rd Ave SE
MERCER ISLAND, WA.
Job Number:
MIS075

plan name: --
marketing name: ASTORIA
plan number: MIS075
mark sys. number:--

Conditions not specifically represented graphically or in writing or which conflict with the current International Residential Code (IRC.) or those of the local municipality then the current standards and requirements of each respectively shall govern.

The drawings in this set are instruments of service and shall remain the property of JayMarc Homes, LLC.

02.21.24
Submittal Date

Sheet Title/Description

JAYMARC HOMES
Design Firm

R.R.
Drawn by:

R.R./ S.K.
Checked by:

.
Primary Scale

Sheet Title/Description

A6
of: .

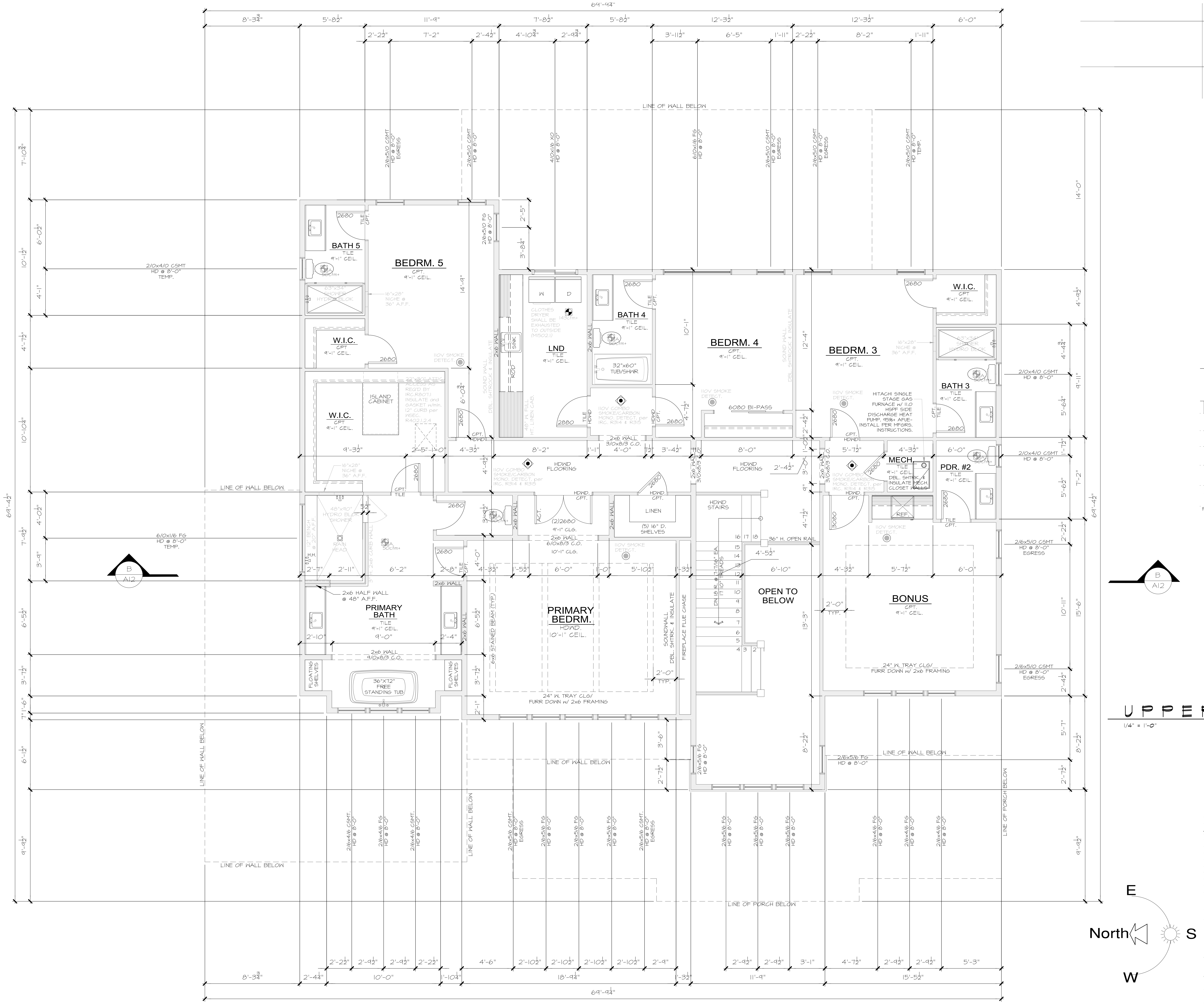
64'-9 1/2"
8'-3 3/4"
5'-8 1/2"
11'-9"
7'-8 1/2"
5'-8 1/2"
12'-3 1/2"
12'-3 1/2"
6'-0"
LINE OF WALL BELOW
BATH 5
BEDRM. 5
CPT. 9'-1" CEIL.
W.I.C.
LND
BATH 4
BEDRM. 4
BEDRM. 3
BATH 3
MECH.
PDR. #2
HDWD FLOORING
HDWD STAIRS
LINEN
(5) 16" D. SHELVES
OPEN TO BELOW
BONUS
PRIMARY BATH
PRIMARY BEDRM.
HDWD. 10'-1" CEIL.
36"X72" FREE STANDING TUB
FLOATING SHELVES
24" W. TRAY CLG/ FURR DOWN w/ 2x6 FRAMING
6080 BI-PASS
HITACHI SINGLE STAGE GAS FURNACE w/ 11.0 HSPF SIDE DISCHARGE HEAT PUMP, 95%+ AFUE- INSTALL PER MFGRS. INSTRUCTIONS.
36" H. OPEN RAIL
2x6 HALF WALL @ 48" A.F.F.
SOUNDWALL DBL. SHTRK. & INSULATE
FIREPLACE FLUE CHASE
LINE OF PORCH BELOW
LINE OF WALL BELOW
B A12
69'-9 1/2"
64'-4 1/2"
E
North
S
W

UPPER FLOOR PLAN

1/4" = 1'-0"

UPPER FLOOR PLAN NOTES:

PLAN SPECIFIC 2018 WSEC. SECTION R06

R406.2 ADDITIONAL ENERGY EFFICIENCY REQUIREMENTS (MANDATORY).

THIS RESIDENTIAL DWELLING SHALL COMPLY w/SUFFICIENT OPTIONS FROM TABLE R406.2 TO ACHIEVE THE FOLLOWING MIN. NUMBER OF CREDITS:

6 FOR a 1,501sf to 4,999sf HOME.

CREDITS PROVIDED IN THIS HOME AS FOLLOWS:

EFFICIENT BUILDING ENVELOPE OPT. 1.3: 0.5 CREDITS

PRESCRIPTIVE COMPLIANCE IS BASED ON TABLE R402.1.1 with FOLLOWING MODIFICATIONS:

VERTICAL FENESTRATION U = 0.28 WINDOWS

FLOORS TO BE R-38 and SLAB ON GRADE TO BE R-10 PERIMETER and UNDER ENTIRE SLAB BELOW GRADE.

HIGH EFFICIENCY HVAC EQUIPMENT OPT. 3.5a: 1.5 CREDITS

AIR-SOURCE, CENTRALLY DUCTED HEAT PUMP WITH MINIMUM HSPF OF 11.0. TO QUALIFY TO CLAIM THIS CREDIT, THE BUILDING PERMIT DRAWINGS SHALL SPECIFY THE OPTION BEING SELECTED AND SHALL SPECIFY THE HEATING EQUIPMENT EFFICIENCY. EXTERIOR LOCATED EQUIPMENT SHOULD ALSO BE REPRESENTED ON SITE PLAN.

HIGH EFFICENCY HVAC DISTRIBUTION OPT. 4.2: 1.0 CREDITS

HVAC EQUIPMENT AND ASSOCIATED DUCT SYSTEMS(S) SHALL COMPLY WITH THE REQUIREMENTS OF SECT R403.3.7. LOCATING SYSTEM COMPONENTS IN CONDITIONED CRAWL SPACES IS NOT PERMITTED UNDER THIS OPTION. ELECTRIC RESISTANCE HEAT AND DUCTLESS HEAT PUMPS ARE NOT PERMITTED UNDER THIS OPTION. DIRECT COMBUSTION HEATING EQUIPMENT WITH AFUE LESS THAN 80% IS NOT PERMITTED UNDER THIS OPTION.

EFFICIENT WATER HEATING 5.5: 2.0 CREDITS

WATER HEATING SYSTEMS SHALL INCLUDE ONE OF THE FOLLOWING: ELECTRIC HEAT PUMP WATER HEATER MEETING THE STANDARDS FOR TIER III OF NEEA'S ADVANCED WATER HEATING SPECIFICATION.

TO QUALIFY TO CLAIM THIS CREDIT, THE BUILDING PERMIT DRAWINGS SHALL SPECIFY THE OPTION BEING SELECTED AND SHALL SPECIFY THE WATER HEATER EQUIPMENT TYPE AND THE MINIMUM EQUIPMENT EFFICIENCY.

WHOLE HOUSE VENTILATION

PROVIDE WHOLE HOUSE VENTILATION per 2018 IRC. M1505.4.3(1) and IMC R403.8. THE WHOLE-HOUSE MECHANICAL VENTILATION SYSTEM SHALL PROVIDE OUTDOOR AIR AT A CONTINUOUS RATE AS DETERMINED IN ACCORDANCE WITH TABLE M1505.4.3(1) OR EQUATION 15.

SYMBOL	LOCATION	MIN. FAN REQUIREMENTS (ALL FANS VENT TO OUTDIDE)
A. 50cfm+	BATH & POWDER	Min. 50cfm. INTERMITTENT at .025wg per TABLE M1507.4
A. 100cfm+	KITCHEN	Min. 100cfm. INTERMITTENT at .025wg per TBL. M1507.4
	RANGE HOOD or DOWN DRAFT EXHAUST FAN RATED at min. 100cfm. at 0.10wg MAY BE USED FOR EXHAUST FAN REQMT. EXHAUST HOODS IN EXCESS OF 400cfm. SHALL BE INTERLOCKED AND PROVIDE MAKE UP AIR per w/M1503.4	
C. 143cfm+ WHF.	LAUNDRY ROOM	MIN. 360cfm. INTERMITTENT at .025wg TO FUNCTION AS WHOLE HOUSE FAN (WHF.)

MECHANICAL CONTRACTOR TO SIZE WHF. FAN and SET OPERATING TIMER per TABLE M1507.3.3(1) FOR A 4,501-5,000sf. DWELLING w/ 5 OR MORE BEDRMS. TO OPERATE INTERMITTENTLY and CONTINUOUSLY per TABLE M1507.3.3(2)

PROVIDE CONTROLS FOR WHF. per M1507.3.2 AFFIX LABEL TO CONTROLS THAT READS "WHOLE HOUSE VENTILATION - SEE OPERATING INSTRUCTIONS"

G.F.A. CALCULATIONS:

SQUARE FOOTAGE SUMMARY

MAIN FLOOR/ MAIN LIVING	2,199	S.F.
A.D.U.	370	S.F.
GARAGE	587	S.F.
SUB TOTAL	3,156	S.F.
UPPER FLOOR/ MAIN LIVING	2,556	S.F.
MINUS MAIN STAIRS	-86	S.F.
SUB TOTAL	2,470	S.F.
TOTAL G.F.A.	5,626	S.F.
ALLOWABLE F.A.R. 40%	5,631	S.F.
PROPOSED	39.96	%.

Updated : 03/09/2018

Method for Calculating Square Footage - ANSI Z765-2013 except: no separate distinction of 'above-grade or below-grade' areas and each level is measured to the outside of studs not the exterior finished surface.

Square footage calculations for this house were made based on plan dimensions only and may vary from the finished square footage of the house as built.

See Sheet "CODES" for additional Zoning required Area Calculations

JAYMARC
HOMES

7525 SE 24th St., 487
Mercer Island, WA
98040
425.266.9100

Issue	Issue Date	By
Description		
	08.27.24	
CITY PLAN REVIEW COMMENTS		

4104 83rd Ave SE
MERCER ISLAND, WA.

Job Number:
MIS075

plan name: --
marketing name: ASTORIA
plan number: MIS075
mark sys. number: --

Conditions not specifically represented graphically or in writing or which conflict with the current International Residential Code (IRC.) or those of the local municipality then the current standards and requirements of each respectively shall govern.

The drawings in this set are instruments of service and shall remain the property of JayMarc Homes, LLC.

02.21.24
Submittal Date

Sheet Title/Description

JAYMARC HOMES
Design Firm

R.R.
Drawn by:

R.R./ S.K.
Checked by:

Primary Scale

Sheet Title/Description

A7
of: .

ROOF VENTILATION

Standard Truss / Scissor Truss Roof Framing Assembly:			**ZONE 1**
Roof Area :	**2182** s.f.		
Ventilation Required:	2182 s.f. x 144 s.i. / s.f. / 300 =		1047.4 s.i. Req'd
Provide between 40% & 50% of the total required ventilation no more than 3 ft below the ridge or the highest point of the space. Remainder to be installed at eave vents.			
Ridge Ventilation: 50% of ventilation			523.68
Continuous Ridge Vent =			18.00 s.i. per l.f.
Upper Ventilation MIN. Req'd =	523.68 s.i. x 0.4	/ s.i. per linear foot =	24 l.f.
Upper Ventilation MAX. Req'd =	523.68 s.i. x 0.5	/ s.i. per linear foot =	29 l.f.
Provide:	**28** l.f. ridge vent.	Ventilation =	504.00 s.i.
Ventilation area remainder for AF50 vents =	19.68 s.i.		
Upper Roof Ventilation: as needed to achive 50% of ventilation			
AF50 Roof Jack (10" x 7") =			50.00 s.i. each.
Upper Ventilation Req'd TO GET 50%=	19.68 s.i.	/ s.i. of each vent =	1 vent
Provide:	**0** -10"x7" roof jacks.	Ventilation =	0.00 s.i.
Eave Ventilation:			
Birdblocking: (3)2" dia holes per bay =	4.71 s.i. / l.f.	- 25% reduction =	3.53 s.i. / l.f.
Eave Ventilation Req'd =	523.68 s.i.	/ s.i. per l.f. =	19.68 l.f.
Provide Minimum:	214 l.f. birdblocking.	Ventilation =	755.96 s.i.
Minimum Ventilation Provided =	**1259.96 s.i.**	**IS GREATER THAN :**	**1047.4 s.i. Req'd**

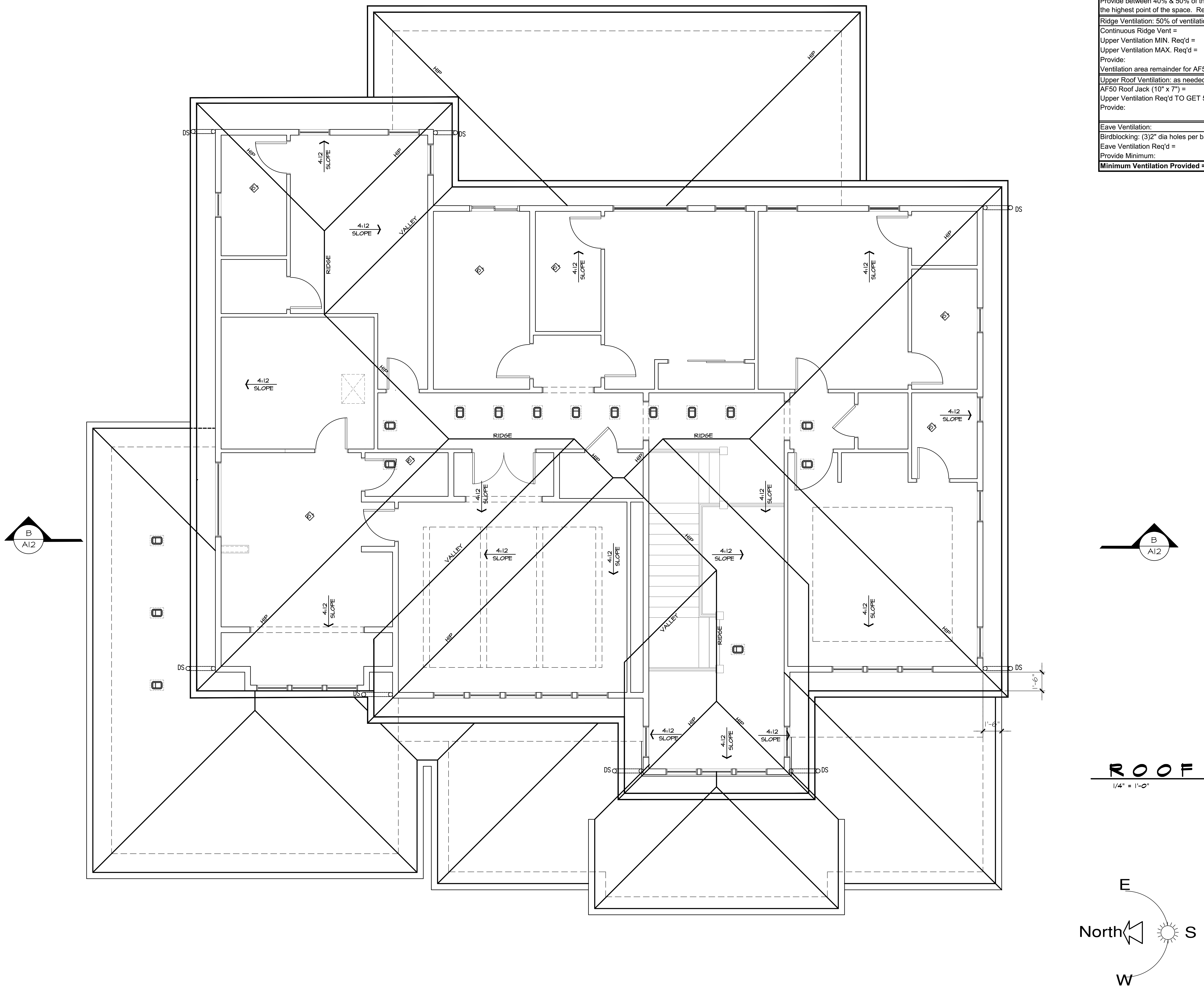

ROOF PLAN

1/4" = 1'-0"

JAYMARC
HOMES

7525 SE 24th St., 487
Mercer Island, WA
98040
425.266.9100

Issue	Issue Date	By
Description		
	08.27.24	
CITY PLAN REVIEW COMMENTS		

4104 83rd Ave SE
MERCER ISLAND, WA.

Job Number:
MIS075

plan name: --
marketing name: ASTORIA
plan number: MIS075
mark sys. number: --

Conditions not specifically represented graphically or in writing or which conflict with the current International Residential Code (IRC.) or those of the local municipality then the current standards and requirements of each respectively shall govern.

The drawings in this set are instruments of service and shall remain the property of JayMarc Homes, LLC.

02.21.24
Submittal Date

Sheet Title/Description

JAYMARC HOMES
Design Firm

R.R.
Drawn by:

R.R./ S.K.
Checked by:

Primary Scale

Sheet Title/Description

A8
of:

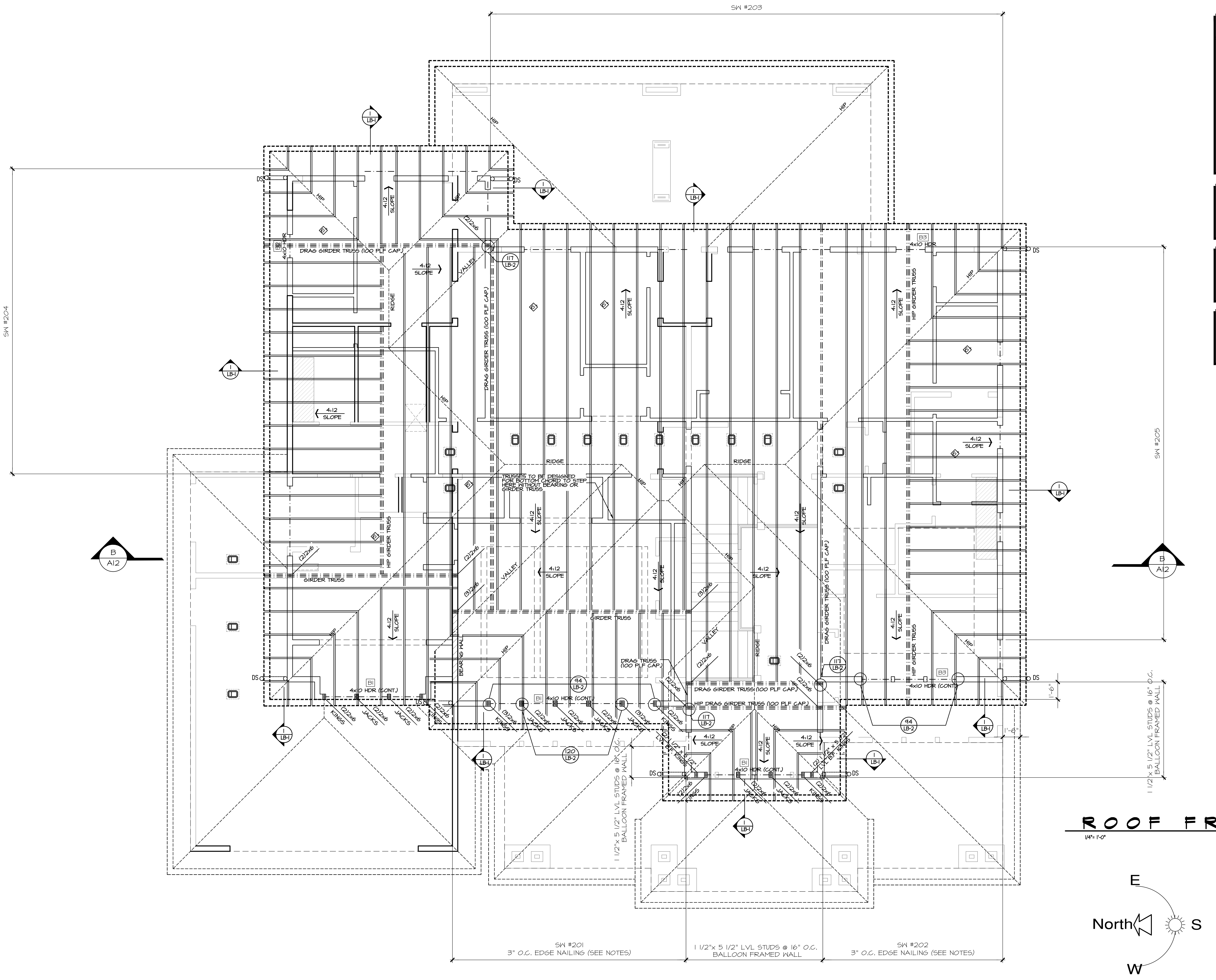
SW #203
SW #204
SW #205
SW #201
3" O.C. EDGE NAILING (SEE NOTES)
1 1/2"x 5 1/2" LVL STUDS @ 16" O.C. BALLOON FRAMED WALL
SW #202
3" O.C. EDGE NAILING (SEE NOTES)
1 1/2"x 5 1/2" LVL STUDS @ 16" O.C. BALLOON FRAMED WALL
DRAG GIRDER TRUSS (100 PLF CAP.)
DRAG GIRDER TRUSS (100 PLF CAP.)
HIP GIRDER TRUSS
GIRDER TRUSS
HIP DRAG GIRDER TRUSS (100 PLF CAP.)
DRAG TRUSS (100 PLF CAP.)
TRUSSES TO BE DESIGNED FOR BOTTOM CHORD TO STEP HERE WITHOUT BEARING OR GIRDER TRUSS
4x10 HDR
4x10 HDR (CONT.)
BEARING WALL
4:12 SLOPE
HIP
RIDGE
VALLEY
(2)2x6
(3)2x6
KINGS
JACKS
DS
B1
B3
1'-6"
1 LB-1
117 LB-2
94 LB-2
120 LB-2
B A12
E
North
S
W

ROOF FRAMING PLAN

1/4"= 1'-0"

LEGEND

- ▨ INTERIOR BEARING WALL
- ═ : ═ : ═ BEAM / HEADER
- ═══ ROOF TRUSS @ 24" O.C. (U.N.O.)
- ══ = ══ GIRDER TRUSS
- ■ ■ ■ ■ INTERIOR SHEAR WALL PANEL OR EXTERIOR SHEAR WALL w/ 3" o.c. EDGE NAILING
- ┘└ METAL HANGER
- ☒ INDICATES OVER FRAMED TRUSS AREA

REFER TO S-0.0 FOR TYPICAL STRUCTURAL NOTES & SCHEDULES

4x10 HDR @ ALL EXT. B1 WINDOWS/DOORS (TYP. U.N.O.)

PROVIDE CONT. EXT. SHEATHING BEHIND LOW TRUSSES DOWN TO SECOND FLOOR SOLE PLATE (TYP. @ LOW ROOF)

JAYMARC
HOMES

7525 SE 24th St., 487
Mercer Island, WA
98040
425.266.9100

△ Issue Description	Issue Date	By
△		
CITY PLAN REVIEW COMMENTS	08.27.24	

4104 83rd Ave SE
MERCER ISLAND, WA.
Job Number:
MIS075

plan name: --
marketing name: ASTORIA
plan number: MIS075
mark sys. number:--

Conditions not specifically represented graphically or in writing or which conflict with the current International Residential Code (IRC.) or those of the local municipality then the current standards and requirements of each respectively shall govern.

The drawings in this set are instruments of service and shall remain the property of JayMarc Homes, LLC.

Submittal Date: 02.21.24

Sheet Title/Description: .

Design Firm: JAYMARC HOMES

Drawn by: R.R.

Checked by: R.R./ S.K.

Primary Scale: .

~Sheet Title/Description

A9

of: .

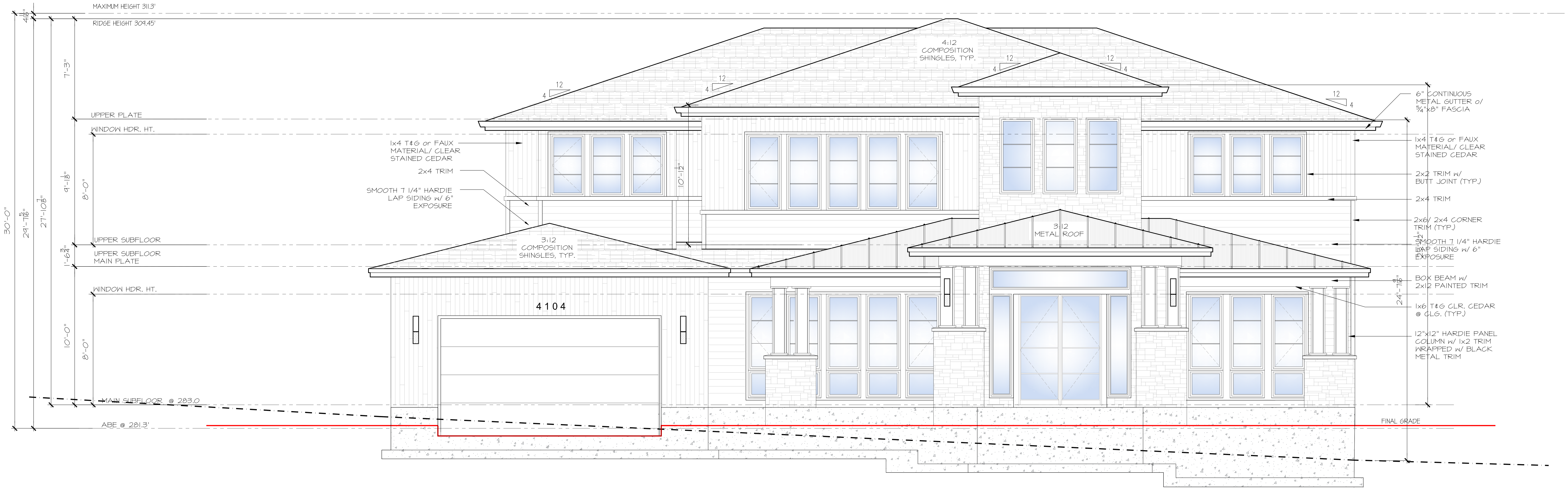
MAXIMUM HEIGHT 311.3'
RIDGE HEIGHT 309.45'
UPPER PLATE
WINDOW HDR. HT.
UPPER SUBFLOOR
UPPER SUBFLOOR
MAIN PLATE
WINDOW HDR. HT.
MAIN SUBFLOOR @ 283.0
ABE @ 281.3'
30'-0"
29'-7 5/16"
27'-10 7/8"
4 11/16"
7'-3"
9'-1 1/8"
8'-0"
1'-6 3/4"
10'-0"
8'-0"
10'-1 1/2"
24'-7 9/16"
4:12
COMPOSITION
SHINGLES, TYP.
3:12
COMPOSITION
SHINGLES, TYP.
3:12
METAL ROOF
12
4
4104
1x4 T&G or FAUX
MATERIAL/ CLEAR
STAINED CEDAR
2x4 TRIM
SMOOTH 7 1/4" HARDIE
LAP SIDING w/ 6"
EXPOSURE
6" CONTINUOUS
METAL GUTTER o/
5/4"x8" FASCIA
1x4 T&G or FAUX
MATERIAL/ CLEAR
STAINED CEDAR
2x2 TRIM w/
BUTT JOINT (TYP.)
2x4 TRIM
2x6/ 2x4 CORNER
TRIM (TYP.)
SMOOTH 7 1/4" HARDIE
LAP SIDING w/ 6"
EXPOSURE
BOX BEAM w/
2x12 PAINTED TRIM
1x6 T&G CLR. CEDAR
@ CLG. (TYP.)
12"x12" HARDIE PANEL
COLUMN w/ 1x2 TRIM
WRAPPED w/ BLACK
METAL TRIM
FINAL GRADE

FRONT ELEVATION

1/4" = 1'-0"

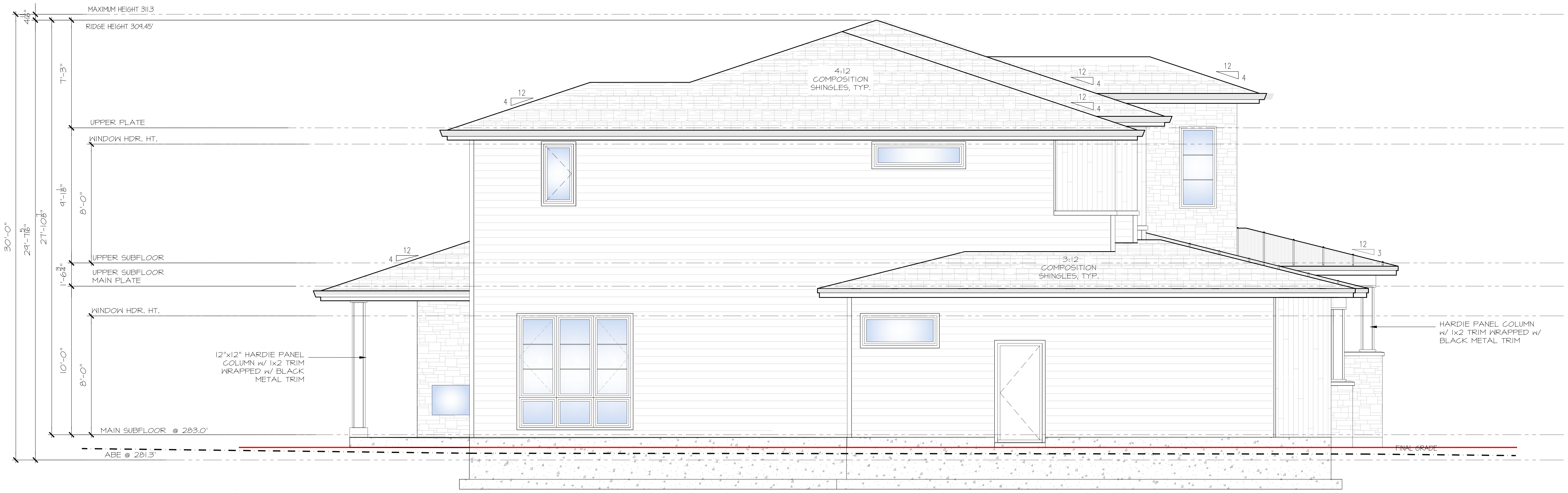
MAXIMUM HEIGHT 311.3
RIDGE HEIGHT 309.45'
UPPER PLATE
WINDOW HDR. HT.
UPPER SUBFLOOR
UPPER SUBFLOOR
MAIN PLATE
WINDOW HDR. HT.
MAIN SUBFLOOR @ 283.0'
ABE @ 281.3'
30'-0"
29'-7 5/16"
27'-10 7/8"
4 11/16"
7'-3"
9'-1 1/8"
8'-0"
1'-6 3/4"
10'-0"
8'-0"
4:12
COMPOSITION
SHINGLES, TYP.
3:12
COMPOSITION
SHINGLES, TYP.
12
4
3
12"x12" HARDIE PANEL
COLUMN w/ 1x2 TRIM
WRAPPED w/ BLACK
METAL TRIM
HARDIE PANEL COLUMN
w/ 1x2 TRIM WRAPPED w/
BLACK METAL TRIM
FINAL GRADE

LEFT ELEVATION

1/4" = 1'-0"

JAYMARC
HOMES

7525 SE 24th St., 487
Mercer Island, WA
98040
425.266.9100

△ Issue	Issue Date	By
Description		
△		
	08.27.24	
CITY PLAN REVIEW COMMENTS		

4104 83rd Ave SE
MERCER ISLAND, WA.

Job Number:
MIS075

plan name: --
marketing name: ASTORIA
plan number: MIS075
mark sys. number:--

Conditions not specifically represented graphically or in writing or which conflict with the current International Residential Code (IRC.) or those of the local municipality then the current standards and requirements of each respectively shall govern.

The drawings in this set are instruments of service and shall remain the property of JayMarc Homes, LLC.

02.21.24
Submittal Date

Sheet Title/Description

JAYMARC HOMES
Design Firm

R.R.
Drawn by:

R.R./ S.K.
Checked by:

Primary Scale

Sheet Title/Description

A10
of:

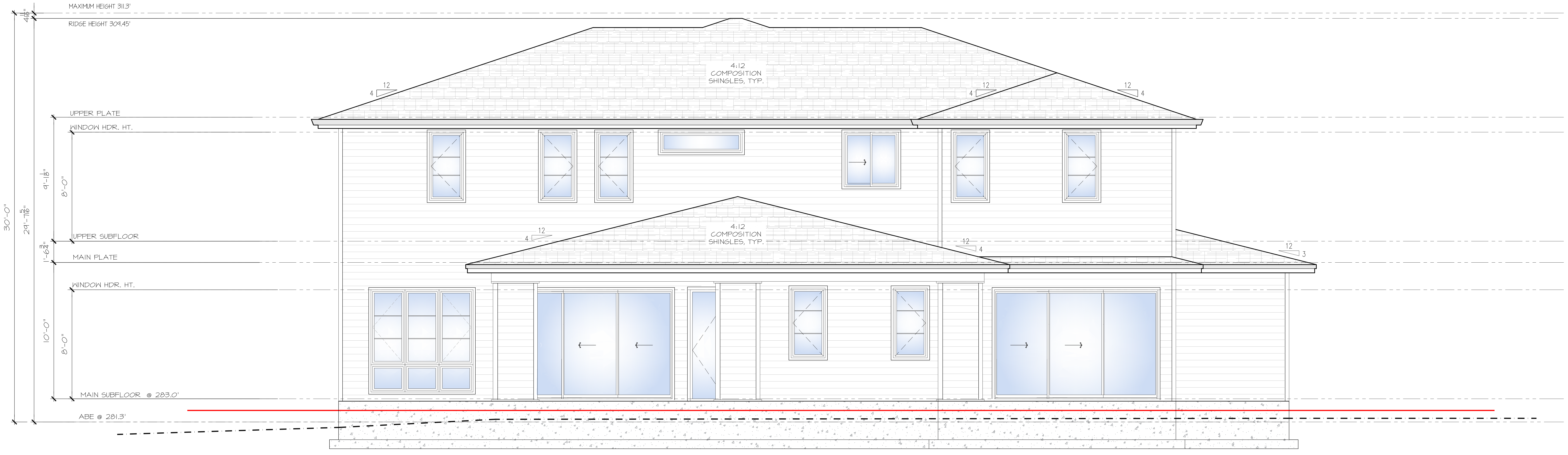
MAXIMUM HEIGHT 311.3'
RIDGE HEIGHT 309.45'
$4\frac{11}{16}$"
30'-0"
29'-$7\frac{5}{16}$"
UPPER PLATE
WINDOW HDR. HT.
9'-$1\frac{1}{8}$"
8'-0"
UPPER SUBFLOOR
1'-$6\frac{3}{4}$"
MAIN PLATE
WINDOW HDR. HT.
10'-0"
8'-0"
MAIN SUBFLOOR @ 283.0'
ABE @ 281.3'
4:12
COMPOSITION
SHINGLES, TYP.
12
4
12
4
12
4
4:12
COMPOSITION
SHINGLES, TYP.
12
4
12
4
12
3

REAR ELEVATION

1/4" = 1'-0"

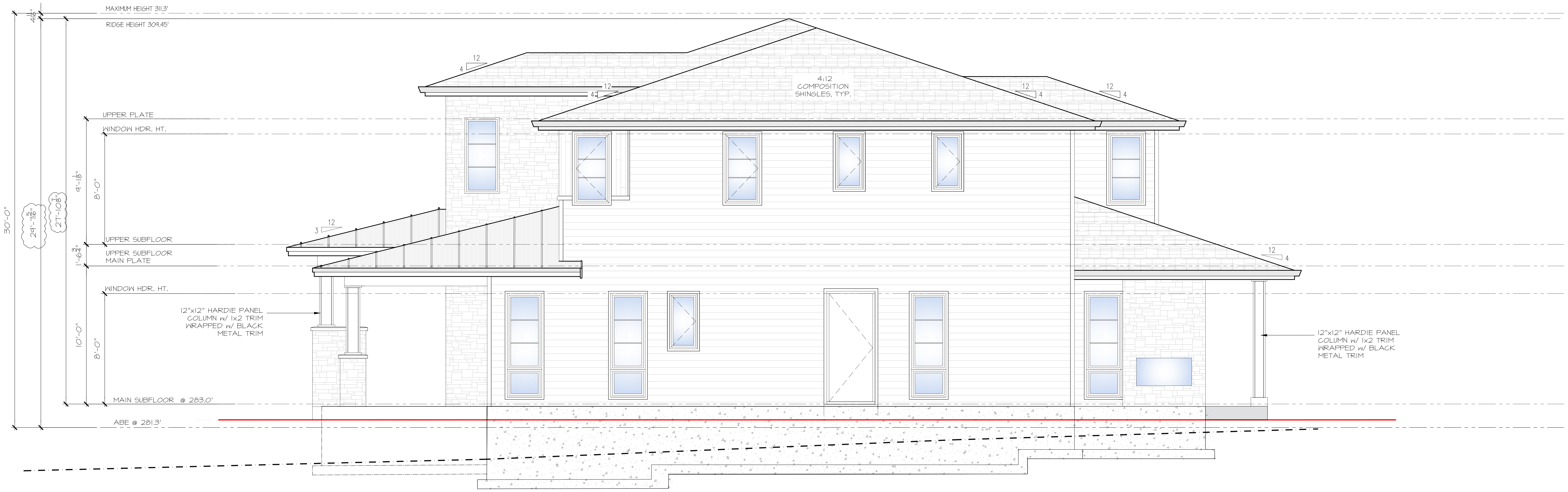
MAXIMUM HEIGHT 311.3'
RIDGE HEIGHT 309.45'
$4\frac{11}{16}$"
30'-0"
29'-$7\frac{5}{16}$"
27'-$10\frac{7}{8}$"
UPPER PLATE
WINDOW HDR. HT.
9'-$1\frac{1}{8}$"
8'-0"
UPPER SUBFLOOR
UPPER SUBFLOOR
MAIN PLATE
1'-$6\frac{3}{4}$"
WINDOW HDR. HT.
10'-0"
8'-0"
MAIN SUBFLOOR @ 283.0'
ABE @ 281.3'
12
4
12
4
4:12
COMPOSITION
SHINGLES, TYP.
12
4
12
4
12
3
12
4
12"x12" HARDIE PANEL
COLUMN w/ 1x2 TRIM
WRAPPED w/ BLACK
METAL TRIM
12"x12" HARDIE PANEL
COLUMN w/ 1x2 TRIM
WRAPPED w/ BLACK
METAL TRIM

RIGHT ELEVATION

1/4" = 1'-0"

JAYMARC
HOMES

7525 SE 24th St., 487
Mercer Island, WA
98040
425.266.9100

△ Issue Issue Date By
Description
△

08.27.24
CITY PLAN REVIEW COMMENTS

4104 83rd Ave SE
MERCER ISLAND, WA.
Job Number:
MIS075

plan name: --
marketing name: ASTORIA
plan number: MIS075
mark sys. number: --

Conditions not specifically represented graphically or in writing or which conflict with the current International Residential Code (IRC.) or those of the local municipality then the current standards and requirements of each respectively shall govern.

The drawings in this set are instruments of service and shall remain the property of JayMarc Homes, LLC.

© 2017 JayMarc Homes, LLC; All rights reserved.

02.21.24
Submittal Date

Sheet Title/Description

JAYMARC HOMES
Design Firm

R.R.
Drawn by:

R.R./ S.K.
Checked by:

Primary Scale

Sheet Title/Description

A11
of: .

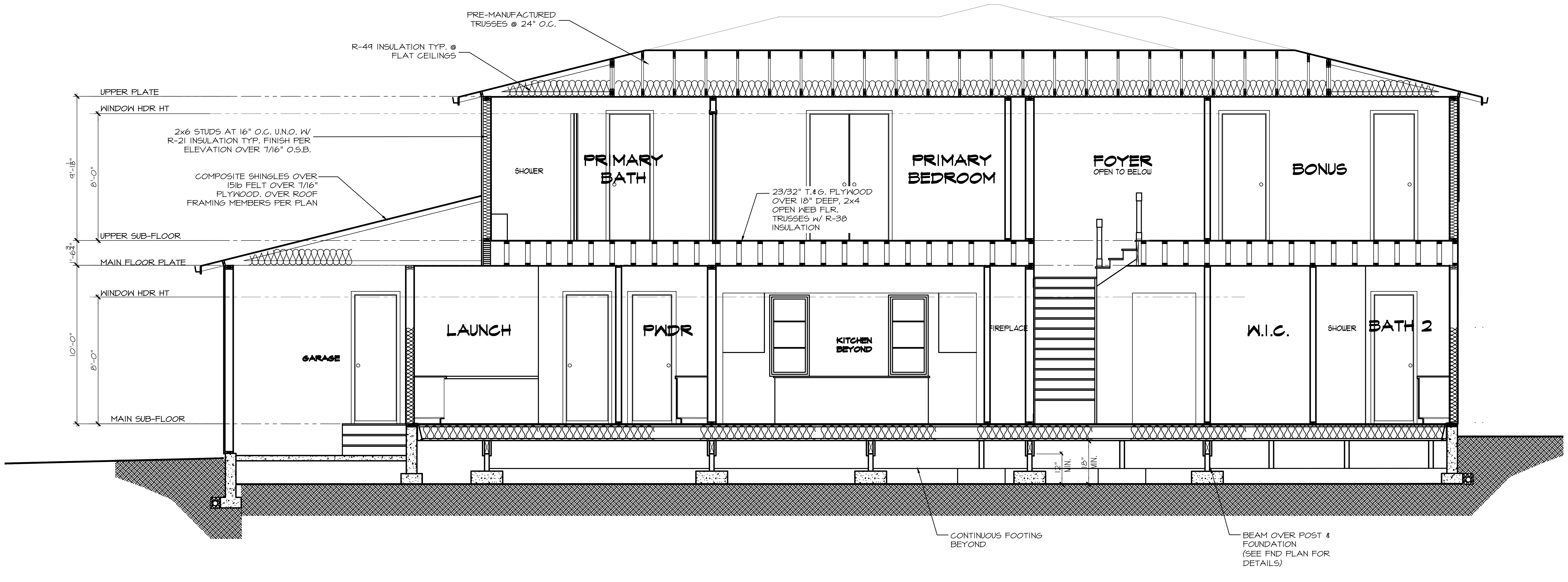
PRE-MANUFACTURED TRUSSES @ 24" O.C.
R-49 INSULATION TYP. @ FLAT CEILINGS
UPPER PLATE
WINDOW HDR HT
2x6 STUDS AT 16" O.C. U.N.O. W/ R-21 INSULATION TYP. FINISH PER ELEVATION OVER 7/16" O.S.B.
9'-1 1/8"
8'-0"
COMPOSITE SHINGLES OVER 15lb FELT OVER 7/16" PLYWOOD. OVER ROOF FRAMING MEMBERS PER PLAN
UPPER SUB-FLOOR
1'-6 3/4"
MAIN FLOOR PLATE
WINDOW HDR HT
10'-0"
8'-0"
MAIN SUB-FLOOR
SHOWER
PRIMARY BATH
23/32" T.&G. PLYWOOD OVER 18" DEEP, 2x4 OPEN WEB FLR. TRUSSES w/ R-38 INSULATION
PRIMARY BEDROOM
FOYER
OPEN TO BELOW
BONUS
GARAGE
LAUNCH
PWDR
KITCHEN BEYOND
FIREPLACE
W.I.C.
SHOWER
BATH 2
12" MIN.
18" MIN.
CONTINUOUS FOOTING BEYOND
BEAM OVER POST & FOUNDATION (SEE FND PLAN FOR DETAILS)

A BUILDING SECTION

1/4" = 1'-0"

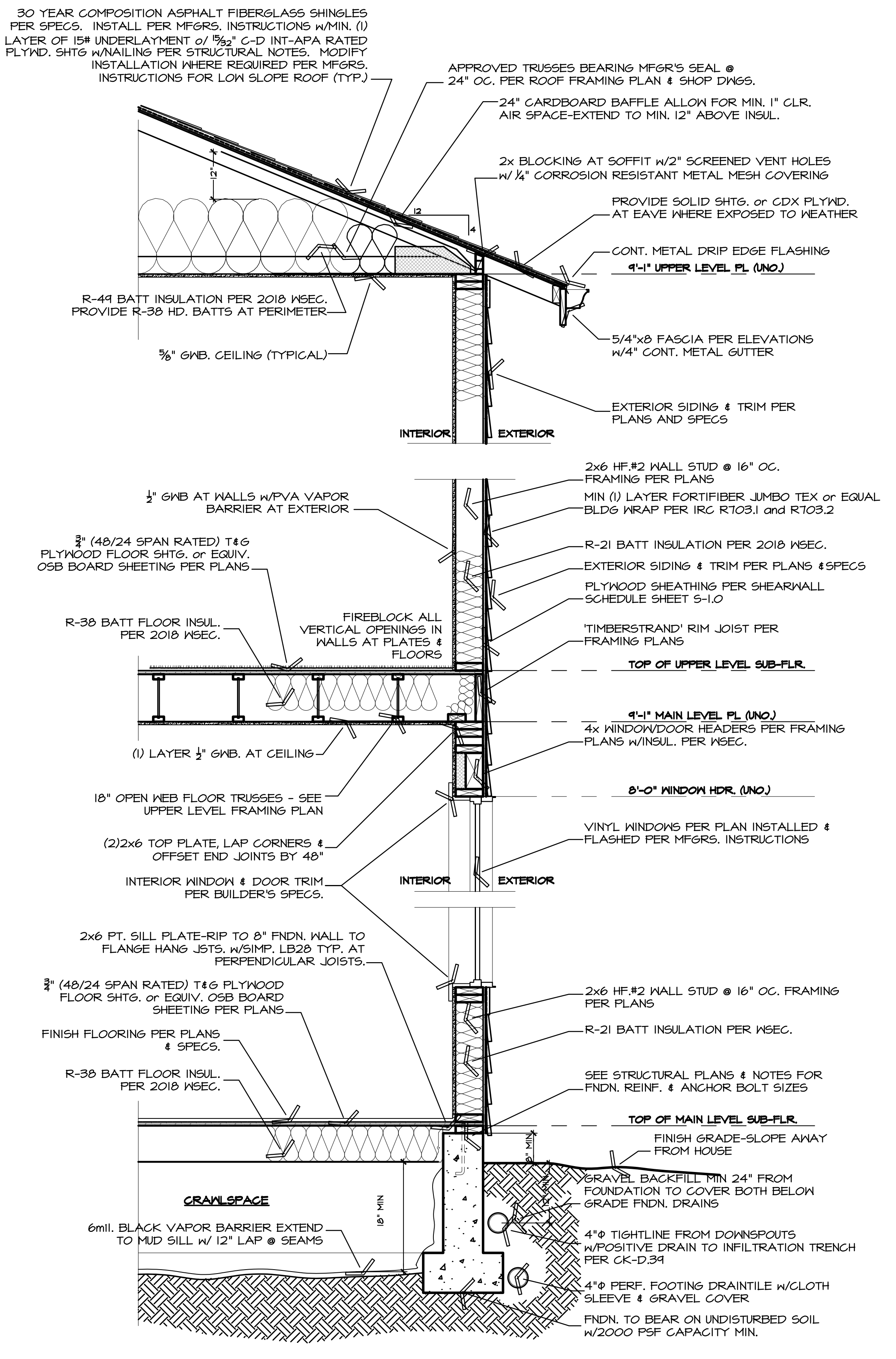
30 YEAR COMPOSITION ASPHALT FIBERGLASS SHINGLES PER SPECS. INSTALL PER MFGRS. INSTRUCTIONS w/MIN. (1) LAYER OF 15# UNDERLAYMENT o/ 15/32" C-D INT-APA RATED PLYWD. SHTG w/NAILING PER STRUCTURAL NOTES. MODIFY INSTALLATION WHERE REQUIRED PER MFGRS. INSTRUCTIONS FOR LOW SLOPE ROOF (TYP.)
APPROVED TRUSSES BEARING MFGR'S SEAL @ 24" OC. PER ROOF FRAMING PLAN & SHOP DWGS.
24" CARDBOARD BAFFLE ALLOW FOR MIN. 1" CLR. AIR SPACE-EXTEND TO MIN. 12" ABOVE INSUL.
2x BLOCKING AT SOFFIT w/2" SCREENED VENT HOLES w/ 1/4" CORROSION RESISTANT METAL MESH COVERING
PROVIDE SOLID SHTG. or CDX PLYWD. AT EAVE WHERE EXPOSED TO WEATHER
CONT. METAL DRIP EDGE FLASHING
9'-1" UPPER LEVEL PL (UNO.)
12"
12
4
R-49 BATT INSULATION PER 2018 WSEC. PROVIDE R-38 HD. BATTS AT PERIMETER
5/8" GWB. CEILING (TYPICAL)
5/4"x8 FASCIA PER ELEVATIONS w/4" CONT. METAL GUTTER
EXTERIOR SIDING & TRIM PER PLANS AND SPECS
INTERIOR
EXTERIOR
2x6 HF.#2 WALL STUD @ 16" OC. FRAMING PER PLANS
1/2" GWB AT WALLS w/PVA VAPOR BARRIER AT EXTERIOR
MIN (1) LAYER FORTIFIBER JUMBO TEX or EQUAL BLDG WRAP PER IRC R703.1 and R703.2
3/4" (48/24 SPAN RATED) T&G PLYWOOD FLOOR SHTG. or EQUIV. OSB BOARD SHEETING PER PLANS
R-21 BATT INSULATION PER 2018 WSEC.
EXTERIOR SIDING & TRIM PER PLANS &SPECS
PLYWOOD SHEATHING PER SHEARWALL SCHEDULE SHEET S-1.0
R-38 BATT FLOOR INSUL. PER 2018 WSEC.
FIREBLOCK ALL VERTICAL OPENINGS IN WALLS AT PLATES & FLOORS
'TIMBERSTRAND' RIM JOIST PER FRAMING PLANS
TOP OF UPPER LEVEL SUB-FLR.
9'-1" MAIN LEVEL PL (UNO.)
(1) LAYER 1/2" GWB. AT CEILING
4x WINDOW/DOOR HEADERS PER FRAMING PLANS w/INSUL. PER WSEC.
8'-0" WINDOW HDR. (UNO.)
18" OPEN WEB FLOOR TRUSSES - SEE UPPER LEVEL FRAMING PLAN
(2)2x6 TOP PLATE, LAP CORNERS & OFFSET END JOINTS BY 48"
VINYL WINDOWS PER PLAN INSTALLED & FLASHED PER MFGRS. INSTRUCTIONS
INTERIOR WINDOW & DOOR TRIM PER BUILDER'S SPECS.
INTERIOR
EXTERIOR
2x6 PT. SILL PLATE-RIP TO 8" FNDN. WALL TO FLANGE HANG JSTS. w/SIMP. LB28 TYP. AT PERPENDICULAR JOISTS.
3/4" (48/24 SPAN RATED) T&G PLYWOOD FLOOR SHTG. or EQUIV. OSB BOARD SHEETING PER PLANS
2x6 HF.#2 WALL STUD @ 16" OC. FRAMING PER PLANS
FINISH FLOORING PER PLANS & SPECS.
R-21 BATT INSULATION PER WSEC.
R-38 BATT FLOOR INSUL. PER 2018 WSEC.
SEE STRUCTURAL PLANS & NOTES FOR FNDN. REINF. & ANCHOR BOLT SIZES
TOP OF MAIN LEVEL SUB-FLR.
FINISH GRADE-SLOPE AWAY FROM HOUSE
8" MIN
CRAWLSPACE
18" MIN
12" MIN
GRAVEL BACKFILL MIN 24" FROM FOUNDATION TO COVER BOTH BELOW GRADE FNDN. DRAINS
6mil. BLACK VAPOR BARRIER EXTEND TO MUD SILL w/ 12" LAP @ SEAMS
4"Φ TIGHTLINE FROM DOWNSPOUTS w/POSITIVE DRAIN TO INFILTRATION TRENCH PER CK-D.39
4"Φ PERF. FOOTING DRAINTILE w/CLOTH SLEEVE & GRAVEL COVER
FNDN. TO BEAR ON UNDISTURBED SOIL w/2000 PSF CAPACITY MIN.

TYPICAL EXTERIOR WALL SECTION

SCALE: 1" = 1'-0"

JAYMARC
HOMES

7525 SE 24th St., 487
Mercer Island, WA
98040
425.266.9100

△ Issue Issue Date By
Description
△ . .
.
. 08.27.24 .
CITY PLAN REVIEW COMMENTS

4104 83rd Ave SE
MERCER ISLAND, WA.
Job Number:
MIS075

plan name: --
marketing name: ASTORIA
plan number: MIS075
mark sys. number:--

Conditions not specifically represented graphically or in writing or which conflict with the current International Residential Code (IRC.) or those of the local municipality then the current standards and requirements of each respectively shall govern.

The drawings in this set are instruments of service and shall remain the property of JayMarc Homes, LLC.

02.21.24
Submittal Date

Sheet Title/Description

JAYMARC HOMES
Design Firm

R.R.
Drawn by:

R.R./ S.K.
Checked by:

.
Primary Scale

Sheet Title/Description

A12
of: .

BASEMENT SLAB

4" CONC. SLAB ON 6 MIL VAPOR BARRIER ON 4" MIN. GRANULAR FILL ON 95% COMPACTED FILL/VIRGIN SOIL

GARAGE SLAB

4" CONC. SLAB ON 4" MIN. GRANULAR FILL ON 95% COMPACTED FILL/VIRGIN SOIL

PORCH SLAB

4" CONC. SLAB ON GRADE ON 6 MIL VAPOR BARRIER ON 4" MIN. GRANULAR FILL ON 95% COMPACTED FILL/VIRGIN SOIL

GENERAL STRUCTURAL NOTES

FOUNDATION

- DESIGN IS BASED ON 2018 INTERNATIONAL RESIDENTIAL CODE & 2018 INTERNATIONAL BUILDING CODE
- DESIGN LOADS:
  SOIL 1,500 PSF ALLOWABLE BEARING PRESSURE
- CONCRETE SHALL ATTAIN THE FOLLOWING MINIMUM COMPRESSIVE STRENGTHS IN 28 DAYS, U.N.O.:
  f'c = 2,500 psi: .... FOUNDATION WALLS*
  2,500 psi: .... FOOTINGS*
  2,500 psi: .... INTERIOR SLABS ON GRADE
  3,500 psi: .... GARAGE & EXT. SLABS ON GRADE
  fy = 60,000 psi
  * UTILIZE 5½" SACK 2500 PSI CONCRETE MIXES THAT ARE EQUIVALENT TO 3,000 PSI CONCRETE FOR WEATHERING POTENTIAL
- ALL CONCRETE EXPOSED TO THE WEATHER SHALL NOT HAVE LESS THAN 5% OR MORE THAN 7% AIR ENTRAINMENT.
- FOUNDATION WALL DESIGN IS BASED ON BACKFILL SOIL CLASSIFICATIONS OF SC, ML-CL, OR CL (60 pcf) SOIL.
- TYPICAL REINFORCEMENT DETAILS: LAP ALL REBAR 24" MIN.; BEND BARS AND LAP AT CORNERS; PROVIDE 6" HOOK INTO SUPPORTING FOOTINGS WHEN FOOTINGS INTERSECT; PROVIDE 3" MINIMUM COVER AT THE BOTTOM BARS AND 1 1/2" COVER AT THE SIDES.
- FOUNDATION WALLS SHALL BE BRACED, PRIOR TO BACKFILLING, BY EITHER ADEQUATE TEMPORARY BRACING OR INSTALLATION OF FIRST FLOOR DECK.
- ALL FOOTINGS SHALL BEAR BELOW FROST LINE. CONSULT SOILS REPORT/ LOCAL MUNICIPALITY FOR MINIMUM DEPTH BELOW GRADE.
- FOOTINGS AND SLABS ON GRADE SHALL BEAR ON VIRGIN SOIL OR 95% COMPACTED FILL.
- PROVIDE CONTROL JOINTS AT ALL INSIDE CORNERS OF SLAB EDGES, AND OTHER LOCATIONS WHERE SLAB CRACKS ARE LIKELY TO DEVELOP. (15'-0" O.C.)
- FASTEN SILL PLATES TO FOUNDATION WALLS WITH ⅝" DIA. ANCHOR BOLTS w/ MIN. 3"x3"x ¼" PLATE WASHERS (EDGE OF WASHER TO BE LOCATED WITHIN ½" OF EXTERIOR EDGE OF SILL PLATE) & NUTS @ 6'-0" O.C. @ 2-STORY & 4'-0" O.C. @ 3-STORY CONDITIONS w/ 7" MIN. EMBEDMENT INTO CONC. PROVIDE A MINIMUM OF 2 ANCHORS PER PLATE, 12" MAXIMUM FROM PLATE ENDS, U.N.O. (SEE FND. DETAILS).
- ALL LUMBER EXPOSED TO WEATHER OR IN CONTACT W/ CONCRETE OR MASONRY FOUNDATION SHALL BE PRESERVATIVE TREATED HEM FIR #2.
- BUILDER TO VERIFY CORROSION-RESISTANCE COMPATIBILITY OF HARDWARE & FASTENERS IN CONTACT w/ PRESERVATIVE-TREATED WOOD. CONTACT LUMBER & HARDWARE SUPPLIERS TO COORDINATE.
- ARCH/BUILDER TO VERIFY ALL DIMENSIONS

" 2018 IRC" - OCT 2020

HOLD-DOWN SCHEDULE

SYMBOL	SPECIFICATION
▶ HD-1	SIMPSON STHD14 (RJ) HOLD-DOWN
▶ HD-5	SIMPSON CS16 STRAP TIE (14" END LENGTH)
▶ HD-6	SIMPSON MSTC40 STRAP TIE (CENTER STRAP ON FLOOR SYSTEM U.N.O.)
▶ HD-7	SIMPSON MSTC66 STRAP TIE (CENTER STRAP ON FLOOR SYSTEM U.N.O.)

MEANS & METHODS NOTES

THE STRUCTURE IS DESIGNED TO BE SELF SUPPORTING AND STABLE AFTER THE BUILDING IS FINISHED AND ALL PLAN, DETAIL, AND NOTE SPECIFICATIONS HAVE BEEN COMPLETED. IT IS THE CONTRACTOR'S SOLE RESPONSIBILITY TO DETERMINE THE ERECTION PROCEDURES AND SEQUENCE TO INSURE THE SAFETY OF THE BUILDING AND ITS COMPONENTS DURING CONSTRUCTION. THIS INCLUDES, BUT IS NOT LIMITED TO, THE ADDITION OF NECESSARY SHORING, SHEETING, TEMPORARY BRACING, GUYS, AND TIE-DOWNS. CONTRACTOR SHALL BE RESPONSIBLE FOR ALL SHORING AND BRACING REQUIRED TO STABILIZE AND PROTECT EXISTING AND ADJACENT STRUCTURES AND SYSTEMS DURING COURSE OF DEMOLITION AND CONSTRUCTION OF THE PROJECT.

STRUCTURAL DESIGN AND SPECIFICATIONS ASSUME THAT ALL SUPPORTING AND NON-SUPPORTING ELEMENTS IN CONTACT WITH FLOOR FRAMING ARE LEVEL, INCLUDING, BUT NOT LIMITED TO; FOUNDATIONS, SLABS ON GRADE, BEAMS, WALLS, AND NON-BEARING ELEMENTS. IT IS THE CONTRACTOR'S RESPONSIBILITY TO VERIFY LEVELNESS AND MAKE ADJUSTMENTS AS NECESSARY, INCLUDING CONSIDERATION OF THOSE AREAS THAT MAY BE WITHIN CONTRACTUAL, INDUSTRY, OR WARRANTY TOLERANCES.

ADDITIONAL NOTES FOR TRUSS & I-JOIST MANUFACTURER

ROOF TRUSS, FLOOR TRUSS AND ENGINEERED JOISTS SHALL BE DESIGNED TO MEET THE DIFFERENTIAL DEFLECTION CRITERIA BELOW, UNLESS NOTED OTHERWISE ON PLAN. MULHERN & KULP CANNOT BE HELD RESPONSIBLE FOR ANY STRUCTURAL ISSUES RELATED TO ANY BUILDING COMPONENT IF COMPONENT SHOP DRAWINGS ARE NOT SUBMITTED TO M&K FOR REVIEW PRIOR TO FABRICATION, DELIVERY, OR INSTALLATION.

TRUSSES SHALL BE DESIGNED SO THAT DIFFERENTIAL DEFLECTION BETWEEN ADJACENT PARALLEL TRUSSES OR GIRDER TRUSSES DOES NOT EXCEED THE FOLLOWING:

A. ROOF TRUSSES:
   1/4" DEAD LOAD
B. FLOOR TRUSSES, ATTIC TRUSSES, & I-JOISTS:
   1/8" DEAD LOAD
C. FLOOR TRUSSES & ATTIC TRUSSES ADJACENT TO FLOOR FRAMING BY OTHERS:
   LIMIT ABSOLUTE TRUSS DEFLECTION TO
   3/16" DEAD LOAD. (NOT DIFFERENTIAL DEFLECTION)

LOADING AND DESIGN PARAMETERS

GRAVITY DESIGN LOADS:

DEAD LOAD (PSF):

ROOF TRUSS TOP CHORD :	10
ROOF TRUSS BOTTOM CHORD :	7
FLOOR (TRUSSES) :	15
FLOOR (I-JOISTS) :	10
TILE FLOORS :	10

LIVE LOAD (PSF):

ROOF :	20
RESIDENTIAL LIVING AREAS :	40
RESIDENTIAL SLEEPING AREAS :	30
RESIDENTIAL WOOD DECKS :	60
GARAGE :	50

SNOW LOAD:

GROUND SNOW LOAD (P_g) (PSF) :	25
FLAT ROOF SNOW LOAD (P_f) (PSF) :	25
SNOW EXPOSURE FACTOR (C_e) :	0.9
SNOW LOAD IMPORTANCE FACTOR (I) :	1.0
THERMAL FACTOR (C_t) :	1.2

LATERAL DESIGN LOADS:

WIND LOAD: (IBC 1609)

SPEED (V_{ult}) (MPH) :	100
WIND RISK CATEGORY :	II
IMPORTANCE FACTOR (I_W) :	1.0
EXPOSURE CATEGORY :	B
INTERNAL PRESSURE COEFF. (GC_{pi}) :	±0.18
TOPOGRAPHIC FACTOR (K_{zt}) :	1.3

SEISMIC LOAD: (IBC 1613)

SEISMIC RISK CATEGORY :		II
SEISMIC IMPORTANCE FACTOR (I_e) :		1.0
MAPPED SPECTRAL RESPONSE :		
S_S: 1.418	S_1: 0.493	
SITE CLASS :		D(DEFAULT)
SPECTRAL RESPONSE COEFF. :		
S_{DS}: 1.134	S_{D1}: 0.594	
SEISMIC DESIGN CATEGORY:		D
BASIC SEISMIC-FORCE-RESISTING SYS : LIGHT FRAMED WALLS W/ WOOD STRUCTURAL PANELS		
ULTIMATE BASE SHEAR:		
TRANS: 23 K	LONG: 23 K	
SEISMIC RESPONSE COEFF. (C_s) :		
TRANS: 0.175	LONG: 0.175	
RESPONSE MODIFICATION FACTOR (R) :		
TRANS: 6.5	LONG: 6.5	
ANALYSIS PROCEDURE USED: EQUIVALENT LATERAL FORCE		

LATERAL BRACING NOTES

THIS HOME HAS BEEN ENGINEERED TO RESIST LATERAL FORCES RESULTING FROM:
100 MPH WIND SPEED, EXP. B
(ASCE 7-16 WIND MAP, PER IRC R301.2.1.1)
RISK CAT. 2 & SEISMIC CAT. D2.

110 MPH WIND IN 2018 IRC MAP

ENGINEERED DESIGN WAS COMPLETED PER 2018 IBC (SECTION 1609 & 1613) & ASCE 7-16, AS PERMITTED BY R301.1.3 OF THE 2018 IRC. ACCORDINGLY, THIS HOME, AS DOCUMENTED AND DETAILED HEREWITHIN, IS ADEQUATE TO RESIST THE CODE REQUIRED LATERAL FORCES, AND DOES NOT NEED TO CONFORM TO THE PRESCRIPTIVE PROVISIONS OF R602.10.

STANDARD EXTERIOR WALL SHEATHING SPECIFICATIONS

(INTERIOR WALL SPECIFICATION WHERE NOTED ON PLANS)

- 7/16" OSB OR 15/32" PLYWOOD:

  FASTEN SHEATHING w/ 2½"x0.131" NAILS @ 6"o.c. AT ALL SUPPORTED PANEL EDGES AND 12" O.C. IN THE PANEL FIELD. ALL SHEATHING SHEET PANEL EDGES SHALL OCCUR OVER WALL FRAMING MEMBERS OR 2x HORIZONTAL BLOCKING SHALL BE PROVIDED TO SUPPORT PANEL EDGE. ALL EXTERIOR WALLS SHALL BE CONSTRUCTED PER THIS SPECIFICATION U.N.O. ON PLANS.

3" o.c. EDGE NAILING

(WHERE NOTED ON PLANS)

- 7/16" OSB OR 15/32" PLYWOOD:

  ONLY AT LOCATIONS INDICATED ON PLANS - SHEATHE WALL SHOWN WITH 7/16" OSB. FASTEN SHEATHING w/ 2½"x0.131" NAILS @ 3" O.C. AT EDGES AND 12" O.C. AT CENTER. ALL SHEATHING SHEET PANEL EDGES SHALL OCCUR OVER WALL FRAMING MEMBERS OR 2x HORIZONTAL BLOCKING SHALL BE PROVIDED TO SUPPORT PANEL EDGE AND 3" O.C. FASTENING.

NOTES:

1. LATERAL ANALYSIS ASSUMES STUD SPACING @ 16" o.c.
2. ALL SHEAR WALLS SHALL HAVE DOUBLE TOP PLATES FASTENED TOGETHER w/ 3"x0.131" NAILS @ 8" O.C. USE (12)3½"x0.135" NAILS AT EACH LAP SPLICE, (6) EACH SIDE OF JOINT (TYP. U.N.O)
3. ALL EXTERIOR WALLS ARE CONTINUOUSLY SHEATHED.
4. ALL INTERIOR SHEAR WALLS AND EXTERIOR WALLS ARE SHEATHED ABOVE AND BELOW OPENINGS.

LEGEND

○ ▭▭▭▭	INTERIOR BEARING WALL
○ ⊏ – – – ⊐	BEARING WALL ABOVE (B.W.A.), OR SHEARWALL ABOVE (S.W.A.)
○ —‑ ‑—	BEAM / HEADER
○ ▬ ▬ ▬	INTERIOR SHEAR WALL PANEL OR EXTERIOR SHEAR WALL w/ 3" o.c. EDGE NAILING
○ ⁘	AREA OF OVERFRAMING
┘└	METAL HANGER
✳	INDICATES POST ABOVE. PROVIDE SOLID BLOCKING UNDER POST OR JAMB ABOVE.
▶	INDICATES HOLDOWN.

RICHARD ZABEL
21031615

GENERAL STRUCTURAL NOTES

DESIGN PARAMETERS

- DESIGN IS BASED ON 2018 INTERNATIONAL RESIDENTIAL CODE & 2018 INTERNATIONAL BUILDING CODE
- WOOD FRAME ENGINEERING IS BASED ON NDS, "NATIONAL DESIGN SPECIFICATION FOR WOOD CONSTRUCTION" - LATEST EDITION.

GENERAL FRAMING

- EXTERIOR BEARING WALLS SHALL BE 2x4 OR 2x6 (AS SHOWN ON PLANS) @ 16" O.C. (w/ DOUBLE TOP PLATE) DOUGLAS FIR (DF) "STUD" GRADE LUMBER, OR BETTER, U.N.O.
- INTERIOR BEARING WALLS SHALL BE 2x4 OR 2x6 (AS SHOWN ON PLANS) @ 16" O.C. (w/ DOUBLE TOP PLATE) DOUGLAS FIR (DF) "STUD" GRADE LUMBER, OR BETTER, U.N.O.
- ALL NON-BEARING INTERIOR STUD WALLS SHALL BE CONSTRUCTED WITH 2x 'STUD' GRADE MEMBERS SPACED @ 24" O.C. (MAX.)
- ALL WALLS TALLER THEN TYP. PLATE HEIGHT SHALL BE CONSIDERED BALLOON FRAMED & SHALL BE CONSTRUCTED FROM FLOOR TO UNDERSIDE OF FRAMING AT NEXT LEVEL. B.F. WALLS SHALL BE 2x4 OR 2x6 (AS SHOWN ON PLANS) HEM FIR (HF) #2 GRADE LUMBER, OR BETTER.
- ALL HEADERS SHALL BE SUPPORTED BY (1)2x JACK STUD & (1)2x KING STUD, MINIMUM.
  - THE NUMBER OF STUDS SPECIFIED AT A SUPPORT INDICATES THE NUMBER OF JACK STUDS REQUIRED, U.N.O..
- BUILT-UP POSTS SHALL BE 2x4 OR 2x6 DOUGLAS FIR (DF) "STUD" GRADE LUMBER, OR BETTER, U.N.O. & SOLID WOOD COLUMNS SHALL BE DOUGLAS FIR (DF) #2 GRADE LUMBER, OR BETTER, U.N.O.
- ALL 2x6 AND LARGER SOLID SAWN BEAMS/HEADERS SHALL BE HEM FIR #2 (HF #2) OR BETTER. ALL 4x6 AND LARGER SOLID SAWN LUMBER SHALL BE DOUGLAS FIR #2 (DF #2) OR BETTER.
- ALL FRAMING LUMBER SHALL BE KILN DRIED TO 15% MC (KD-15).
- ALL TYP. NAIL FASTENER REQUIREMENTS ARE NOTED IN GENERAL NOTES, IN DETAILS, OR ON PLANS. ALL NAILS SPECIFIED ARE MIN DIAMETER AND LENGTH REQUIRED FOR CONNECTION. ALL HANGER NAILS SHALL BE INSTALLED PER MANUFACTURER'S REQUIREMENTS FOR MAX CHARTED CAPACITY. NOTE: HANGERS USE COMMON NAIL DIAMETERS NOT TYPICAL FRAMING GUN NAILS.
- FASTEN ALL BEAMS TO COLUMNS, OR FLUSH BEAMS TO SUPPORTING BEAMS, w/ (4) 3"x0.131" TOENAILS (MIN.), TYP. U.N.O.
- PROVIDE SOLID BLOCKING IN FLOOR SYSTEM UNDER ALL POSTS & HOLD-DOWNS CONTINUOUS TO FOUNDATION/BEARING. BLOCKING TO MATCH POST ABOVE.
- ENGINEERED LUMBER TO MEET OR EXCEED THE FOLLOWING:
  - LSL MEMBERS - F_b=2325 PSI; F_v=310 PSI; E=1.55x10^6 PSI
  - LVL MEMBERS - F_b=2600 PSI; F_v=285 PSI; E=2.0x10^6 PSI
  - GLB MEMBERS - $F_b(+)$=2400 PSI; $F_b(-)$=1850 PSI; F_v=265 PSI; E=1.8x10^6 PSI; DF/DF; 24F-V4 (U.N.O)
- ENGINEERED LUMBER POSTS TO MEET OR EXCEED THE FOLLOWING:
  - LVL MEMBERS - F_b=2400 PSI; $F_{c\parallel}$=2500 PSI; E=1.8x10^6 PSI
- FACE NAIL MULTI-PLY 2x BEAMS & HEADERS W/ 3-ROWS OF 3"x0.131" NAILS (MIN.) @ 12" O.C. STAGGERED. APPLY NAILING FROM BOTH FACES @ 3-PLY OR MORE CONDITIONS. UTILIZE 2 ROWS OF NAILS FOR 2x6 & 2x8 MEMBERS.
- ALL MEMBERS SPECIFIED AS MULTI-PLY 1¾" SHALL BE FASTENED TOGETHER PER MANUFACTURER. EQUIVALENT WIDTH SOLID MATERIAL MAY BE USED AS EQUAL.
- FASTEN 2x WOOD PLATES TO TOP FLANGE OF STEEL BEAMS w/P.A.F.s ('HILTI' X-U PINS OR EQUAL (0.157" DIA. x 2" LONG MIN.)) @ 16" O.C. STAGGERED, OR 1/2" DIA. BOLTS @ 48" O.C., STAGGERED.
- REFER TO IRC FASTENING SCHEDULE TABLE R602.3(1) FOR ALL CONNECTIONS, TYP. U.N.O.

FLOOR FRAMING

- I-JOISTS/TRUSSES SHALL BE DESIGNED BY MANUF. TO MEET OR EXCEED L/480 LIVE LOAD DEFLECTION CRITERIA AND SHALL RUN CONTINUOUS OVER SUPPORTS WHEREVER POSSIBLE. ALL LOADS SHOWN ON PLAN FOR MANUF. DESIGNS ARE ASD LEVEL LOADS, U.N.O. (EXCLUDES STONE/MARBLE OR WET BED CONSTRUCTED FLOORS - CONTACT M&K FOR EXCLUDED DESIGNS).
- ALL METAL I-JOIST/TRUSS HANGERS SHALL BE SPECIFIED BY I-JOIST/TRUSS MANUFACTURER, UNLESS OTHERWISE NOTED.
- I-JOIST/TRUSS SHOP DRAWINGS SHALL BE SUBMITTED TO ARCHITECT AND ENGINEER FOR REVIEW AND APPROVAL PRIOR TO FABRICATION OR DELIVERY.
- 2x FLOOR JOISTS HAVE BEEN DESIGNED TO MEET OR EXCEED L/360 LIVE LOAD DEFLECTION CRITERIA.
- TYPICAL 2x JOIST HANGERS (U.N.O. ON PLANS):
  SINGLE PLY: SIMPSON LUS210
  DOUBLES: SIMPSON LUS210-2
- FLOOR SHEATHING SHALL BE 23/32" A.P.A. RATED 'STURD-I-FLOOR' 24" O.C, EXPOSURE I (OR APPROVED EQUAL) WITH TONGUE AND GROOVE EDGES. FASTEN TO FRAMING MEMBERS W/ GLUE AND 2 ½" x 0.131" NAILS @ 6"o.c. @ PANEL EDGES & @ 12"o.c. FIELD.
- ALL FLUSH CONNECTIONS SHALL BE CONNECTED WITH HANGER APPROPRIATE FOR MEMBER SIZE. U.N.O.
- FASTEN HANGERS TO SINGLE PLY FLUSH BEAMS w/ 1½" LONG NAILS.

ROOF FRAMING

- FASTEN EACH ROOF TRUSS TO TOP PLATE W/ (4) 3"x0.131" TOENAILS (MIN.) & (1) 'SIMPSON' SDWC15600 SCREW @ ALL BEARING POINTS. PROVIDE (2) 'SIMPSON' SDWC15600 SCREWS AT 2-PLY GIRDER TRUSSES, (3) 'SIMPSON' SDWC15600 SCREWS AT 3-PLY GIRDER TRUSSES AT ALL BEARING POINTS.
- FASTEN EACH ROOF RAFTER TO TOP PLATE WITH (1) 'SIMPSON' SDWC15600 SCREW. PROVIDE (2) 'SIMPSON' SDWC15600 SCREWS AT FLUSH BEAMS IN THE ROOF - AT ALL BEARING POINTS.
- ROOF SHEATHING SHALL BE 7/16" A.P.A. RATED SHEATHING 24/16 EXPOSURE I (OR APPROVED EQUAL). FASTEN TO FRAMING MEMBERS w/ 2 ½" x 0.131" NAILS @ 6"o.c. AT PANEL EDGES & @ 12" O.C. AT INTERMEDIATE SUPPORTS. ROOF SHEATHING SHALL EXTEND BELOW ALL INSTANCES OF OVERFRAMING. BLOCKING SHALL BE INSTALLED AS REQUIRED TO LIMIT ROOF SHEATHING SPANS TO 24" MAX.
- WITHIN 48" OF ALL ROOF EDGES, RIDGES, & HIPS FASTEN ROOF SHEATHING FIELDS PER EDGE NAILING SPEC.
- ALL METAL HANGERS SHALL BE SPECIFIED BY THE TRUSS MANUFACTURER, UNLESS OTHERWISE NOTED.
- ROOF TRUSS SHOP DRAWINGS SHALL BE SUBMITTED TO ARCHITECT AND ENGINEER FOR REVIEW AND APPROVAL PRIOR TO FABRICATION OR DELIVERY.
- ROOF TRUSS SHOP DRAWINGS & CALCULATIONS SHALL BE PREPARED BY A WASHINGTON STATE LICENSED ENGINEER AND SHALL BE DESIGNED FOR UNBALANCED SNOW LOADING PER ASCE 7-16, SECTION 7.6.
- ERECT AND INSTALL ROOF TRUSSES PER WTCA & TPI'S BCSI 1-08 "GUIDE TO GOOD PRACTICE FOR HANDLING, INSTALLING & BRACING OF METAL PLATE CONNECTED WOOD TRUSSES."
- FASTEN OVER-FRAMED TRUSS SETS TO TRUSSES BELOW w/ (2) 3"x0.131" TOENAILS AT EA. TRUSS.
- SUPPORT PORCH & SHORT SPAN ROOF TRUSSES (UP TO 6' TRIB.) w/2x6 LEDGER FASTENED TO FRAMING w/(3) 3"x0.131" NAILS @ 16" o.c.
- FASTEN ALL INTERIOR NON-BEARING PARTITION WALLS TO TRUSS BOTTOM CHORD ABOVE WITH SIMPSON STC CLIPS AT 24" o.c. MAX. PROVIDE BLOCKING BETWEEN THE TRUSS BOTTOM CHORDS AS REQUIRED FOR THE PARALLEL CONDITIONS.

" 2018 IRC" - OCT 2020

seal:

© copyright : MULHERN & KULP
Structural Engineering, Inc.

MULHERN+KULP
RESIDENTIAL STRUCTURAL ENGINEERING
7220 Trade Street, Suite 295, San Diego, CA 92121
p 619-650-0010 ▸ mulhernkulp.com

M&K project number: 154-23017

project mgr: RJZ
drawn by: BFD
issue date: 01-18-24

REVISIONS:

date:	initial:
07/17/2024 ARCH REVISIONS	AJC

JAYMARC HOMES

STRUCTURAL NOTES
4104 83RD AVE SE
MERCER ISLAND, WASHINGTON

sheet:
S-0.0

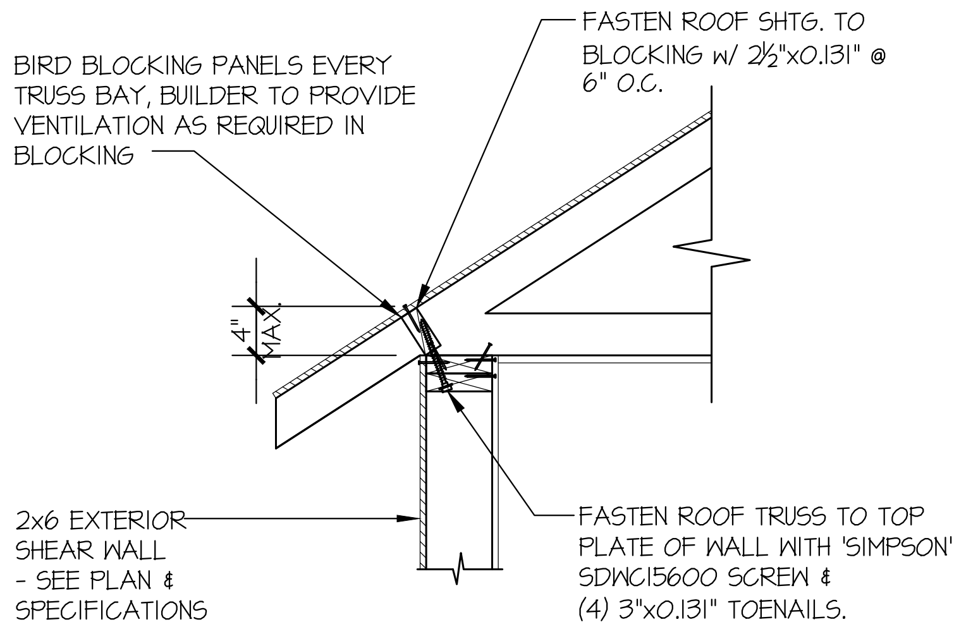
BIRD BLOCKING PANELS EVERY TRUSS BAY, BUILDER TO PROVIDE VENTILATION AS REQUIRED IN BLOCKING
FASTEN ROOF SHTG. TO BLOCKING w/ 2½"x0.131" @ 6" O.C.
4" MAX.
2x6 EXTERIOR SHEAR WALL - SEE PLAN & SPECIFICATIONS
FASTEN ROOF TRUSS TO TOP PLATE OF WALL WITH 'SIMPSON' SDWC15600 SCREW & (4) 3"x0.131" TOENAILS.

TYPICAL SHEAR TRANSFER DETAIL @ ROOF
1
SCALE: 3/4"=1'-0"
HEEL HEIGHT LESS THAN 4"

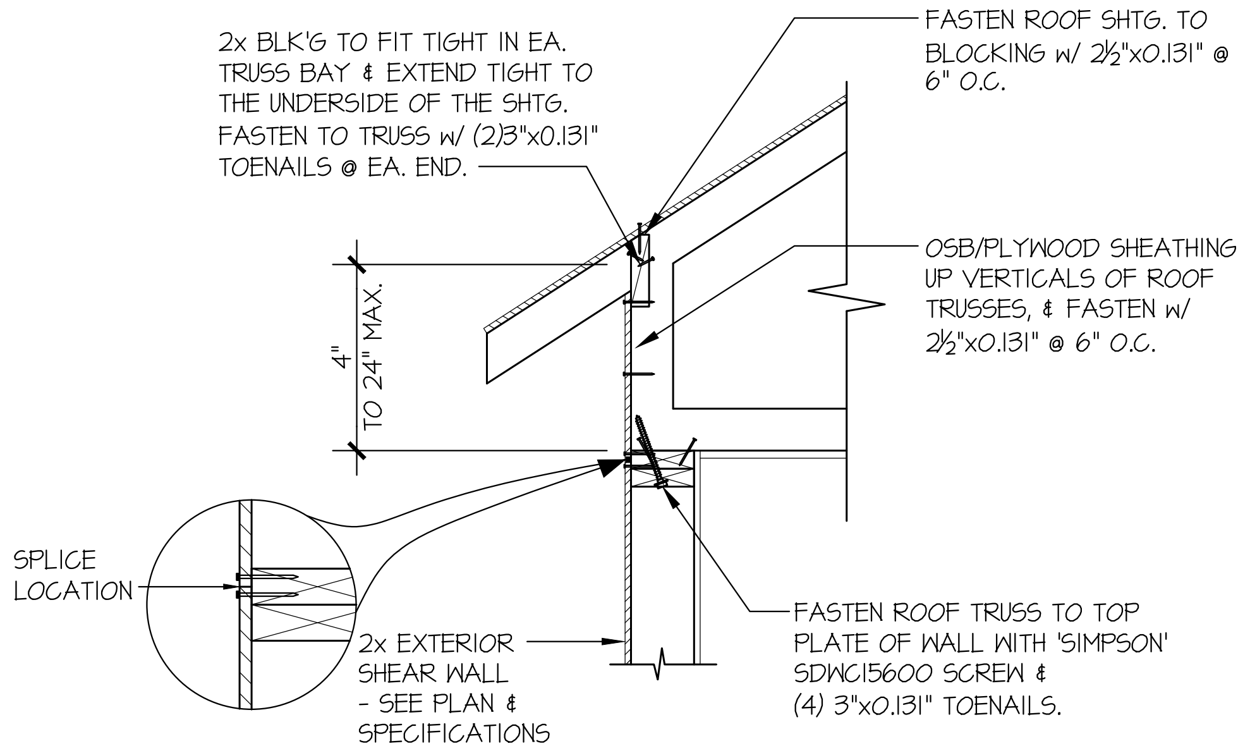
2x BLK'G TO FIT TIGHT IN EA. TRUSS BAY & EXTEND TIGHT TO THE UNDERSIDE OF THE SHTG. FASTEN TO TRUSS w/ (2)3"x0.131" TOENAILS @ EA. END.
FASTEN ROOF SHTG. TO BLOCKING w/ 2½"x0.131" @ 6" O.C.
OSB/PLYWOOD SHEATHING UP VERTICALS OF ROOF TRUSSES, & FASTEN w/ 2½"x0.131" @ 6" O.C.
4" TO 24" MAX.
SPLICE LOCATION
2x EXTERIOR SHEAR WALL - SEE PLAN & SPECIFICATIONS
FASTEN ROOF TRUSS TO TOP PLATE OF WALL WITH 'SIMPSON' SDWC15600 SCREW & (4) 3"x0.131" TOENAILS.

TYPICAL SHEAR TRANSFER DETAIL @ RAISED HEEL TRUSS
1
SCALE: 3/4"=1'-0"
HEEL HEIGHT UP TO 24" MAX.

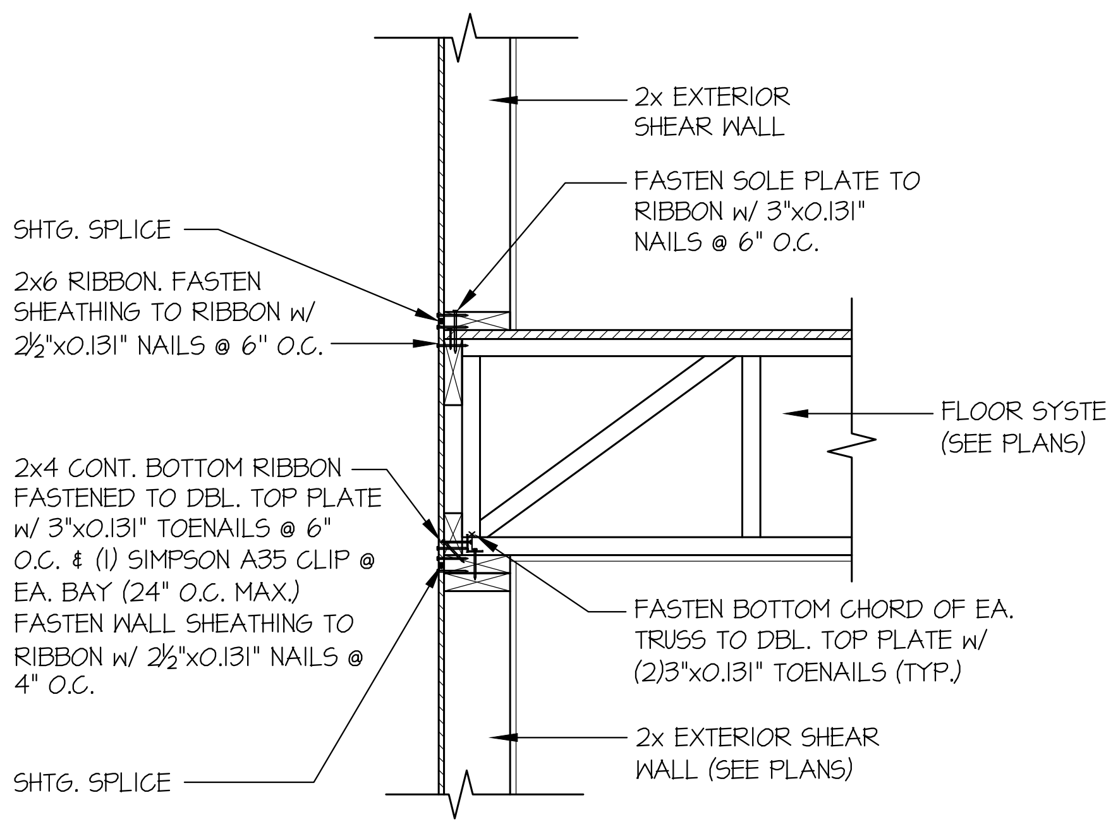
2x EXTERIOR SHEAR WALL
SHTG. SPLICE
FASTEN SOLE PLATE TO RIBBON w/ 3"x0.131" NAILS @ 6" O.C.
2x6 RIBBON. FASTEN SHEATHING TO RIBBON w/ 2½"x0.131" NAILS @ 6" O.C.
FLOOR SYSTEM (SEE PLANS)
2x4 CONT. BOTTOM RIBBON FASTENED TO DBL. TOP PLATE w/ 3"x0.131" TOENAILS @ 6" O.C. & (1) SIMPSON A35 CLIP @ EA. BAY (24" O.C. MAX.) FASTEN WALL SHEATHING TO RIBBON w/ 2½"x0.131" NAILS @ 4" O.C.
FASTEN BOTTOM CHORD OF EA. TRUSS TO DBL. TOP PLATE w/ (2)3"x0.131" TOENAILS (TYP.)
2x EXTERIOR SHEAR WALL (SEE PLANS)
SHTG. SPLICE

TYPICAL SHEAR TRANSFER DETAIL BETWEEN FLOORS @ EXTERIOR WALL
3
SCALE: 3/4"=1'-0"
PERPENDICULAR FRAMING

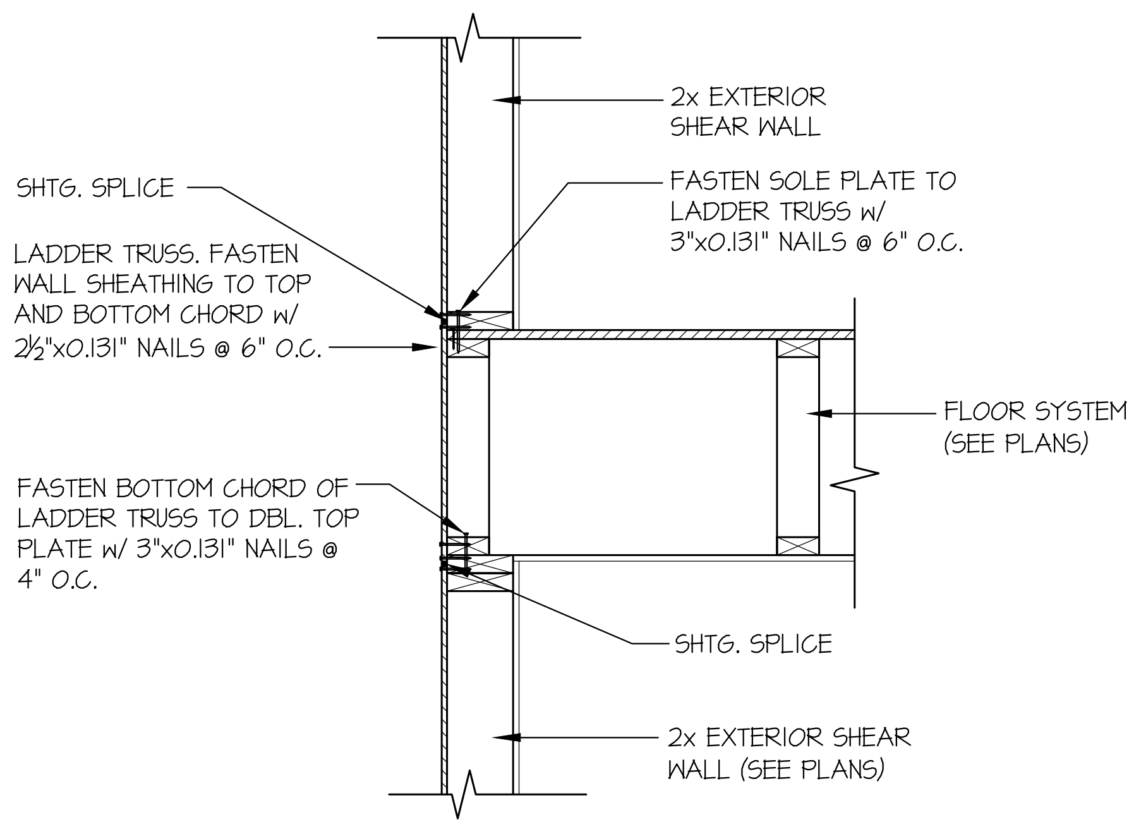
2x EXTERIOR SHEAR WALL
SHTG. SPLICE
FASTEN SOLE PLATE TO LADDER TRUSS w/ 3"x0.131" NAILS @ 6" O.C.
LADDER TRUSS. FASTEN WALL SHEATHING TO TOP AND BOTTOM CHORD w/ 2½"x0.131" NAILS @ 6" O.C.
FLOOR SYSTEM (SEE PLANS)
FASTEN BOTTOM CHORD OF LADDER TRUSS TO DBL. TOP PLATE w/ 3"x0.131" NAILS @ 4" O.C.
SHTG. SPLICE
2x EXTERIOR SHEAR WALL (SEE PLANS)

TYPICAL SHEAR TRANSFER DETAIL BETWEEN FLOORS @ EXTERIOR WALL
4
SCALE: 3/4"=1'-0"
PARALLEL FRAMING

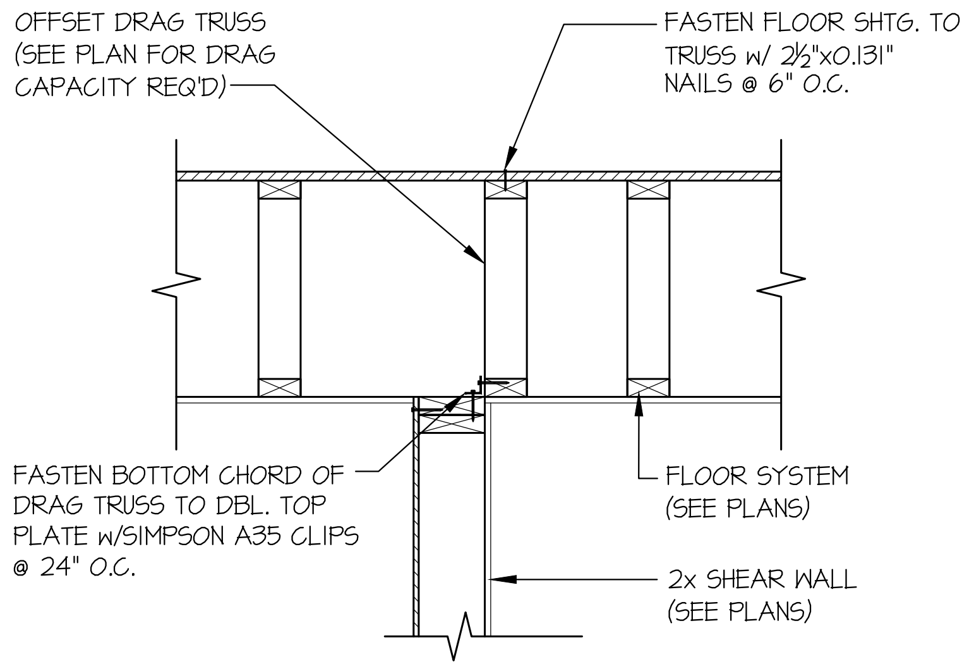
OFFSET DRAG TRUSS (SEE PLAN FOR DRAG CAPACITY REQ'D)
FASTEN FLOOR SHTG. TO TRUSS w/ 2½"x0.131" NAILS @ 6" O.C.
FASTEN BOTTOM CHORD OF DRAG TRUSS TO DBL. TOP PLATE w/SIMPSON A35 CLIPS @ 24" O.C.
FLOOR SYSTEM (SEE PLANS)
2x SHEAR WALL (SEE PLANS)

SHEAR TRANSFER DETAIL @ SHEAR WALL BELOW
11
SCALE: 3/4"=1'-0"

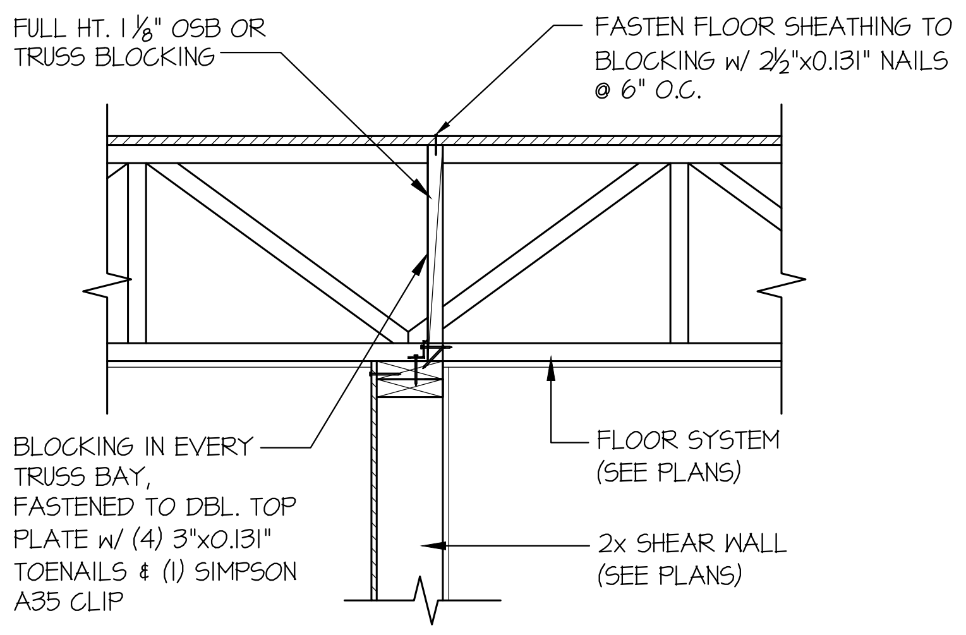
FULL HT. 1⅛" OSB OR TRUSS BLOCKING
FASTEN FLOOR SHEATHING TO BLOCKING w/ 2½"x0.131" NAILS @ 6" O.C.
BLOCKING IN EVERY TRUSS BAY, FASTENED TO DBL. TOP PLATE w/ (4) 3"x0.131" TOENAILS & (1) SIMPSON A35 CLIP
FLOOR SYSTEM (SEE PLANS)
2x SHEAR WALL (SEE PLANS)

SHEAR TRANSFER DETAIL @ SHEAR WALL BELOW
13
SCALE: 3/4"=1'-0"

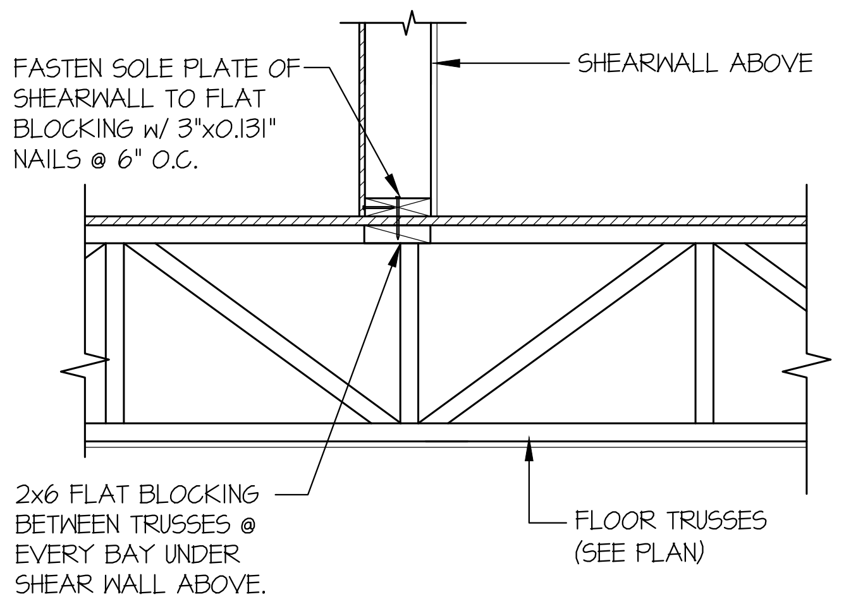
FASTEN SOLE PLATE OF SHEARWALL TO FLAT BLOCKING w/ 3"x0.131" NAILS @ 6" O.C.
SHEARWALL ABOVE
2x6 FLAT BLOCKING BETWEEN TRUSSES @ EVERY BAY UNDER SHEAR WALL ABOVE.
FLOOR TRUSSES (SEE PLAN)

SHEAR TRANSFER DETAIL @ INTERIOR SHEAR WALL
19
SCALE: 3/4"=1'-0"
PERPENDICULAR FRAMING

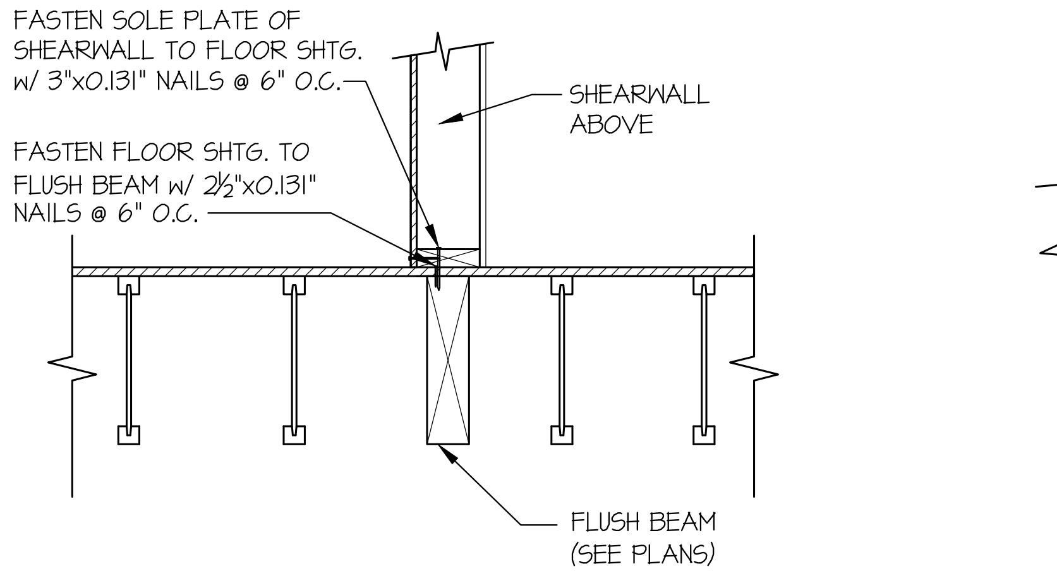
FASTEN SOLE PLATE OF SHEARWALL TO FLOOR SHTG. w/ 3"x0.131" NAILS @ 6" O.C.
SHEARWALL ABOVE
FASTEN FLOOR SHTG. TO FLUSH BEAM w/ 2½"x0.131" NAILS @ 6" O.C.
FLUSH BEAM (SEE PLANS)

SHEAR TRANSFER DETAIL @ INTERIOR SHEARWALL ABOVE
20
SCALE: 3/4"=1'-0"
PARALLEL FRAMING

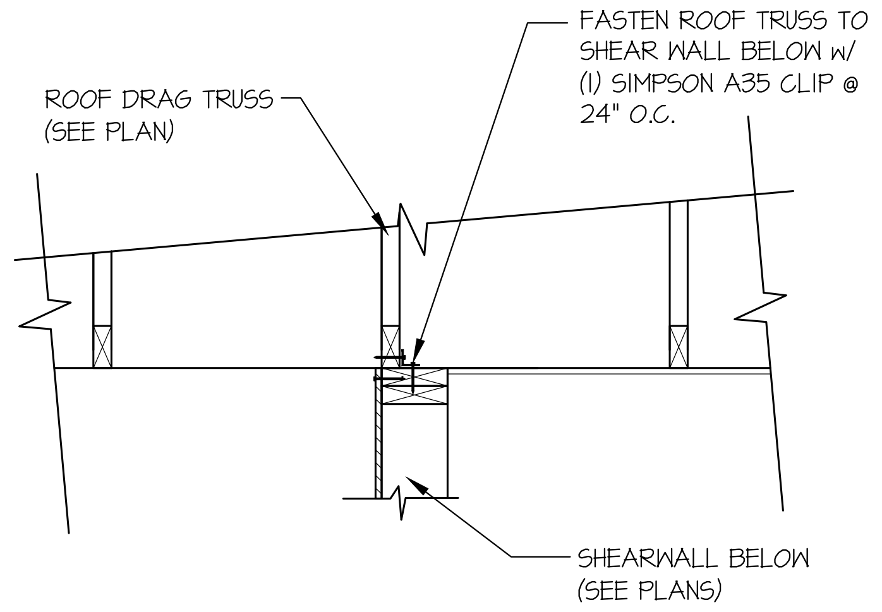
ROOF DRAG TRUSS (SEE PLAN)
FASTEN ROOF TRUSS TO SHEAR WALL BELOW w/ (1) SIMPSON A35 CLIP @ 24" O.C.
SHEARWALL BELOW (SEE PLANS)

SHEAR TRANSFER DETAIL @ INTERIOR SHEARWALL BELOW
47
SCALE: 3/4"=1'-0"

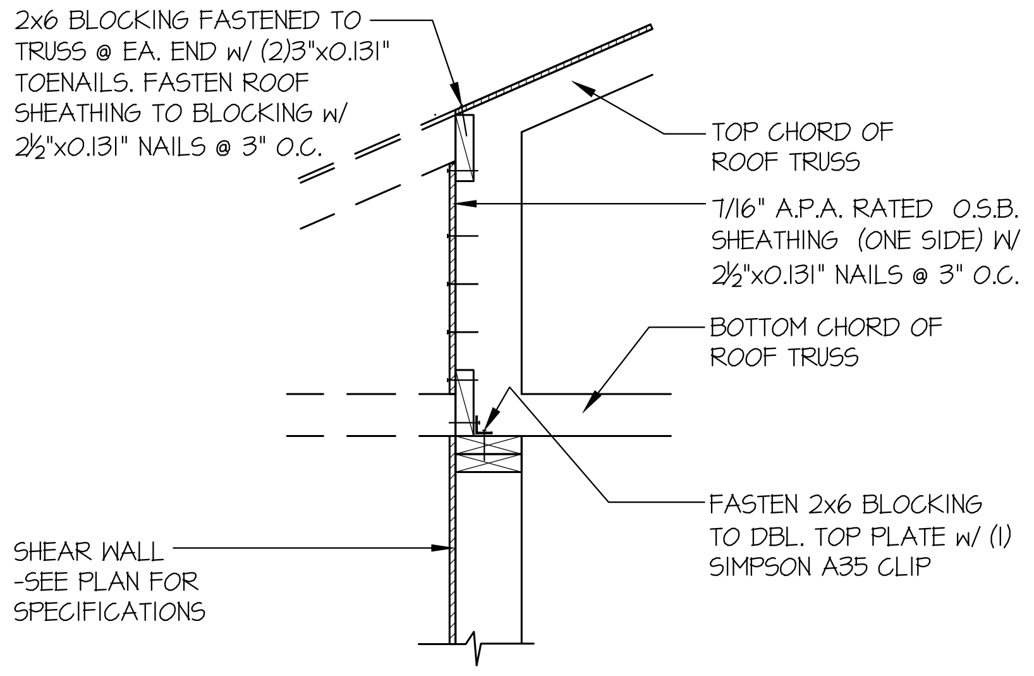
2x6 BLOCKING FASTENED TO TRUSS @ EA. END w/ (2)3"x0.131" TOENAILS. FASTEN ROOF SHEATHING TO BLOCKING w/ 2½"x0.131" NAILS @ 3" O.C.
TOP CHORD OF ROOF TRUSS
7/16" A.P.A. RATED O.S.B. SHEATHING (ONE SIDE) W/ 2½"x0.131" NAILS @ 3" O.C.
BOTTOM CHORD OF ROOF TRUSS
FASTEN 2x6 BLOCKING TO DBL. TOP PLATE w/ (1) SIMPSON A35 CLIP
SHEAR WALL -SEE PLAN FOR SPECIFICATIONS

SHEAR TRANSFER DETAIL @ SHEARWALL BELOW
49
SCALE: 3/4"=1'-0"

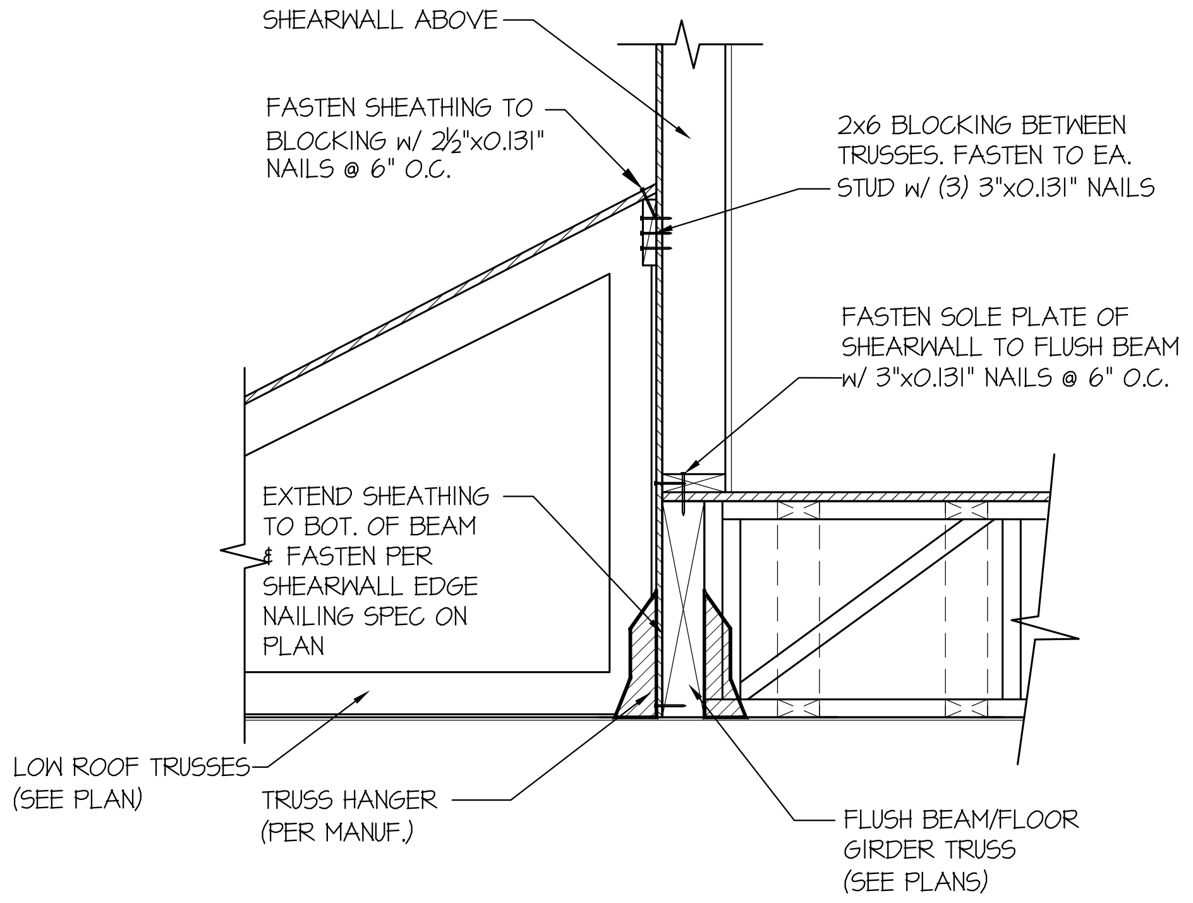
SHEARWALL ABOVE
FASTEN SHEATHING TO BLOCKING w/ 2½"x0.131" NAILS @ 6" O.C.
2x6 BLOCKING BETWEEN TRUSSES. FASTEN TO EA. STUD w/ (3) 3"x0.131" NAILS
FASTEN SOLE PLATE OF SHEARWALL TO FLUSH BEAM w/ 3"x0.131" NAILS @ 6" O.C.
EXTEND SHEATHING TO BOT. OF BEAM & FASTEN PER SHEARWALL EDGE NAILING SPEC ON PLAN
LOW ROOF TRUSSES (SEE PLAN)
TRUSS HANGER (PER MANUF.)
FLUSH BEAM/FLOOR GIRDER TRUSS (SEE PLANS)

SHEAR TRANSFER DETAIL @ EXTERIOR SHEARWALL ABOVE
58
SCALE: 3/4"=1'-0"

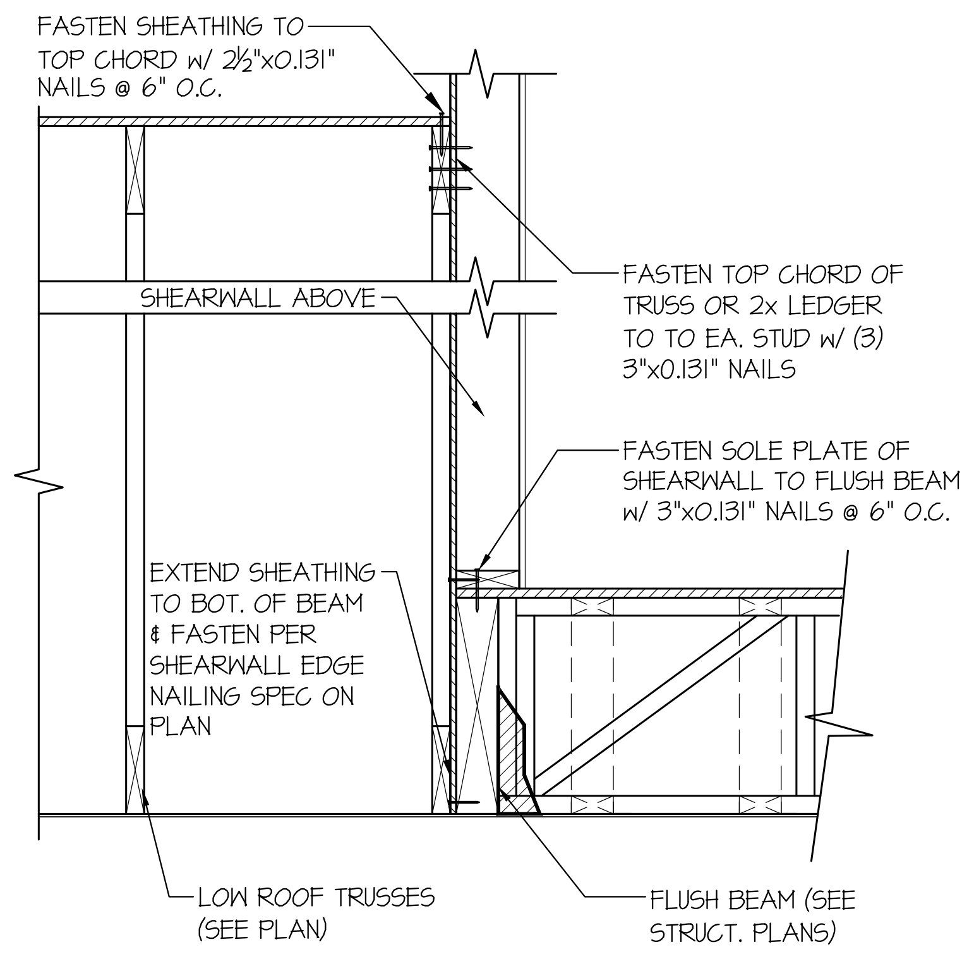
FASTEN SHEATHING TO TOP CHORD w/ 2½"x0.131" NAILS @ 6" O.C.
SHEARWALL ABOVE
FASTEN TOP CHORD OF TRUSS OR 2x LEDGER TO TO EA. STUD w/ (3) 3"x0.131" NAILS
FASTEN SOLE PLATE OF SHEARWALL TO FLUSH BEAM w/ 3"x0.131" NAILS @ 6" O.C.
EXTEND SHEATHING TO BOT. OF BEAM & FASTEN PER SHEARWALL EDGE NAILING SPEC ON PLAN
LOW ROOF TRUSSES (SEE PLAN)
FLUSH BEAM (SEE STRUCT. PLANS)

SHEAR TRANSFER DETAIL @ EXTERIOR SHEARWALL ABOVE
59
SCALE: 3/4"=1'-0"

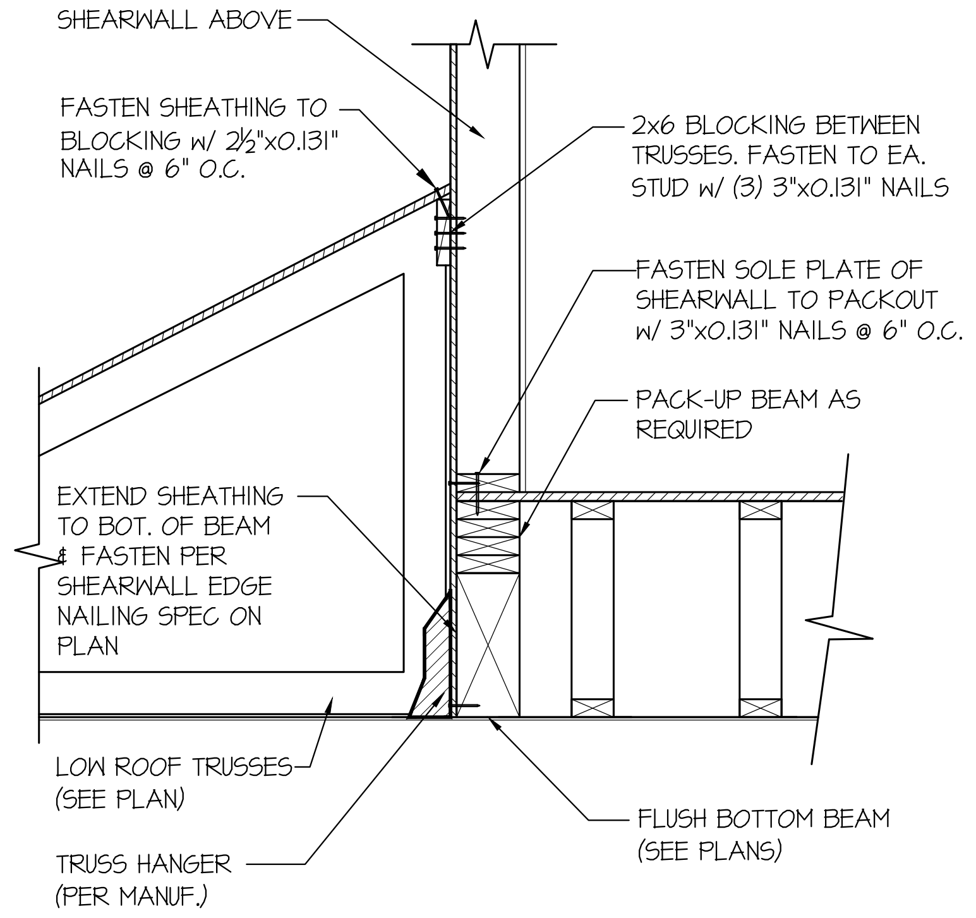
SHEARWALL ABOVE
FASTEN SHEATHING TO BLOCKING w/ 2½"x0.131" NAILS @ 6" O.C.
2x6 BLOCKING BETWEEN TRUSSES. FASTEN TO EA. STUD w/ (3) 3"x0.131" NAILS
FASTEN SOLE PLATE OF SHEARWALL TO PACKOUT w/ 3"x0.131" NAILS @ 6" O.C.
PACK-UP BEAM AS REQUIRED
EXTEND SHEATHING TO BOT. OF BEAM & FASTEN PER SHEARWALL EDGE NAILING SPEC ON PLAN
LOW ROOF TRUSSES (SEE PLAN)
TRUSS HANGER (PER MANUF.)
FLUSH BOTTOM BEAM (SEE PLANS)

SHEAR TRANSFER DETAIL @ EXTERIOR SHEARWALL ABOVE
60
SCALE: 3/4"=1'-0"

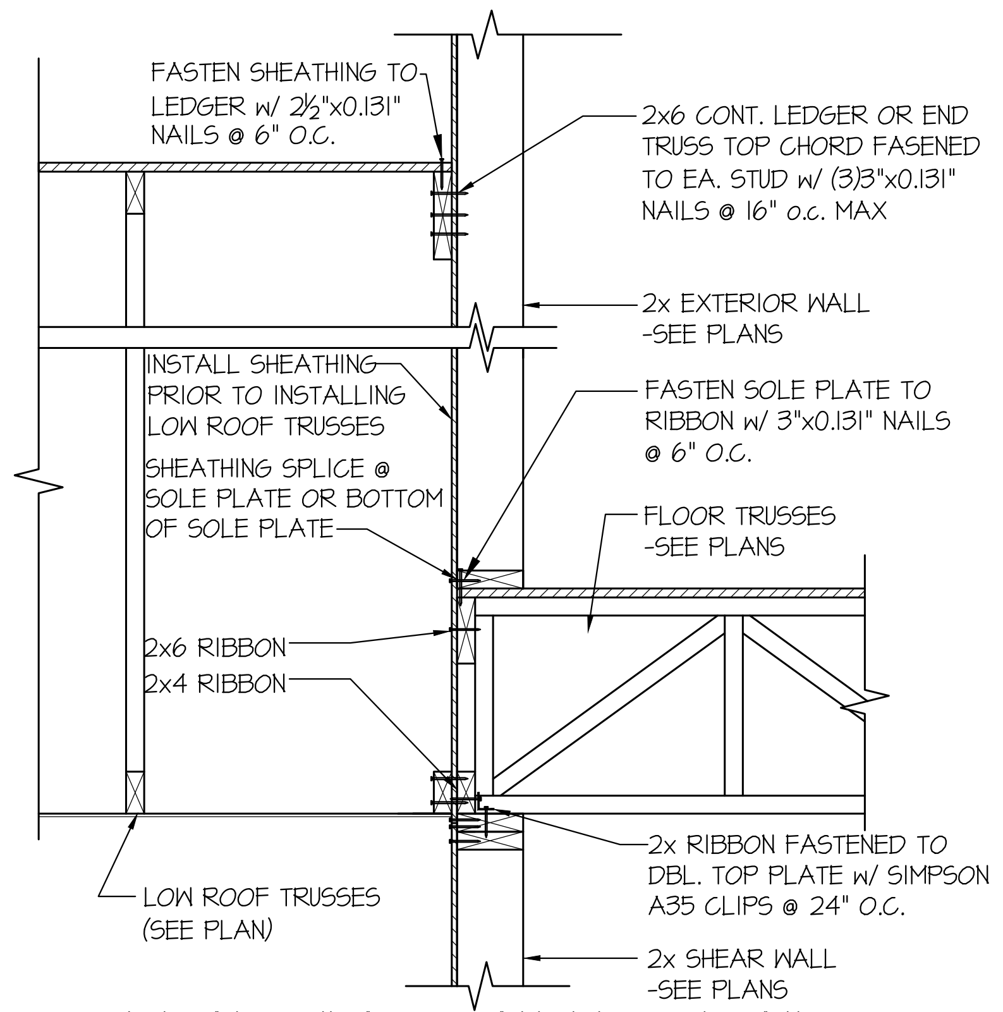
FASTEN SHEATHING TO LEDGER w/ 2½"x0.131" NAILS @ 6" O.C.
2x6 CONT. LEDGER OR END TRUSS TOP CHORD FASENED TO EA. STUD w/ (3)3"x0.131" NAILS @ 16" o.c. MAX
2x EXTERIOR WALL -SEE PLANS
INSTALL SHEATHING PRIOR TO INSTALLING LOW ROOF TRUSSES
SHEATHING SPLICE @ SOLE PLATE OR BOTTOM OF SOLE PLATE
FASTEN SOLE PLATE TO RIBBON w/ 3"x0.131" NAILS @ 6" O.C.
FLOOR TRUSSES -SEE PLANS
2x6 RIBBON
2x4 RIBBON
2x RIBBON FASTENED TO DBL. TOP PLATE w/ SIMPSON A35 CLIPS @ 24" O.C.
LOW ROOF TRUSSES (SEE PLAN)
2x SHEAR WALL -SEE PLANS

TYPICAL SHEAR TRANSFER DETAIL BETWEEN FLOORS
61
SCALE: 3/4"=1'-0"
PERPENDICULAR FRAMING

seal:
RICHARD ZABEL
21031615

© copyright : MULHERN & KULP Structural Engineering, Inc.

MULHERN+KULP
RESIDENTIAL STRUCTURAL ENGINEERING
7220 Trade Street, Suite 295, San Diego, CA 92121
p 619-650-0010 ▸ *mulhernkulp.com*

M&K project number: 154-23017

project mgr: RJZ
drawn by: BFD
issue date: 01-18-24

REVISIONS:

date:	initial:
07/17/2024 ARCH REVISIONS	AJC

JAYMARC HOMES

STRUCTURAL DETAILS
4104 83RD AVE SE
MERCER ISLAND, WASHINGTON

sheet:
LB-1

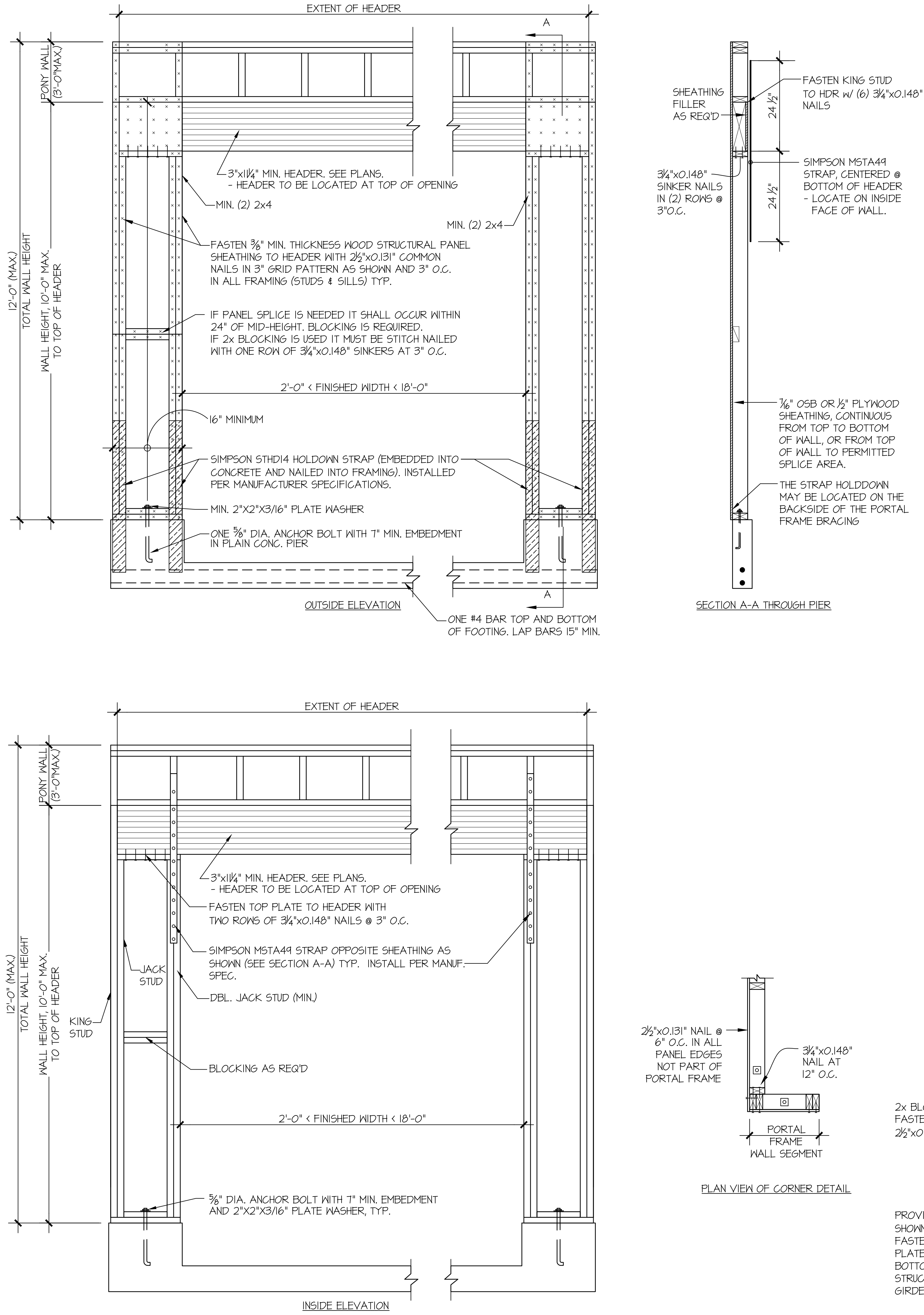
EXTENT OF HEADER
A
PONY WALL (3'-0"MAX.)
12'-0" (MAX.) TOTAL WALL HEIGHT
WALL HEIGHT, 10'-0" MAX. TO TOP OF HEADER
3"x11¼" MIN. HEADER. SEE PLANS.
- HEADER TO BE LOCATED AT TOP OF OPENING
MIN. (2) 2x4
MIN. (2) 2x4
FASTEN ⅜" MIN. THICKNESS WOOD STRUCTURAL PANEL SHEATHING TO HEADER WITH 2½"x0.131" COMMON NAILS IN 3" GRID PATTERN AS SHOWN AND 3" O.C. IN ALL FRAMING (STUDS & SILLS) TYP.
IF PANEL SPLICE IS NEEDED IT SHALL OCCUR WITHIN 24" OF MID-HEIGHT. BLOCKING IS REQUIRED. IF 2x BLOCKING IS USED IT MUST BE STITCH NAILED WITH ONE ROW OF 3¼"x0.148" SINKERS AT 3" O.C.
2'-0" < FINISHED WIDTH < 18'-0"
16" MINIMUM
SIMPSON STHD14 HOLDOWN STRAP (EMBEDDED INTO CONCRETE AND NAILED INTO FRAMING). INSTALLED PER MANUFACTURER SPECIFICATIONS.
MIN. 2"X2"X3/16" PLATE WASHER
ONE ⅝" DIA. ANCHOR BOLT WITH 7" MIN. EMBEDMENT IN PLAIN CONC. PIER
ONE #4 BAR TOP AND BOTTOM OF FOOTING. LAP BARS 15" MIN.
SHEATHING FILLER AS REQ'D
FASTEN KING STUD TO HDR w/ (6) 3¼"x0.148" NAILS
24 ½"
3¼"x0.148" SINKER NAILS IN (2) ROWS @ 3"O.C.
SIMPSON MSTA49 STRAP, CENTERED @ BOTTOM OF HEADER
- LOCATE ON INSIDE FACE OF WALL.
24 ½"
7/16" OSB OR ½" PLYWOOD SHEATHING, CONTINUOUS FROM TOP TO BOTTOM OF WALL, OR FROM TOP OF WALL TO PERMITTED SPLICE AREA.
THE STRAP HOLDDOWN MAY BE LOCATED ON THE BACKSIDE OF THE PORTAL FRAME BRACING
EXTENT OF HEADER
PONY WALL (3'-0"MAX.)
12'-0" (MAX.) TOTAL WALL HEIGHT
WALL HEIGHT, 10'-0" MAX. TO TOP OF HEADER
3"x11¼" MIN. HEADER. SEE PLANS.
- HEADER TO BE LOCATED AT TOP OF OPENING
FASTEN TOP PLATE TO HEADER WITH TWO ROWS OF 3¼"x0.148" NAILS @ 3" O.C.
SIMPSON MSTA49 STRAP OPPOSITE SHEATHING AS SHOWN (SEE SECTION A-A) TYP. INSTALL PER MANUF. SPEC.
JACK STUD
KING STUD
DBL. JACK STUD (MIN.)
BLOCKING AS REQ'D
2'-0" < FINISHED WIDTH < 18'-0"
⅝" DIA. ANCHOR BOLT WITH 7" MIN. EMBEDMENT AND 2"X2"X3/16" PLATE WASHER, TYP.
2½"x0.131" NAIL @ 6" O.C. IN ALL PANEL EDGES NOT PART OF PORTAL FRAME
3¼"x0.148" NAIL AT 12" O.C.
PORTAL FRAME WALL SEGMENT

OUTSIDE ELEVATION

SECTION A-A THROUGH PIER

INSIDE ELEVATION

PLAN VIEW OF CORNER DETAIL

1 APA PORTAL FRAME DETAIL WITH HOLDOWNS

SCALE: N.T.S.

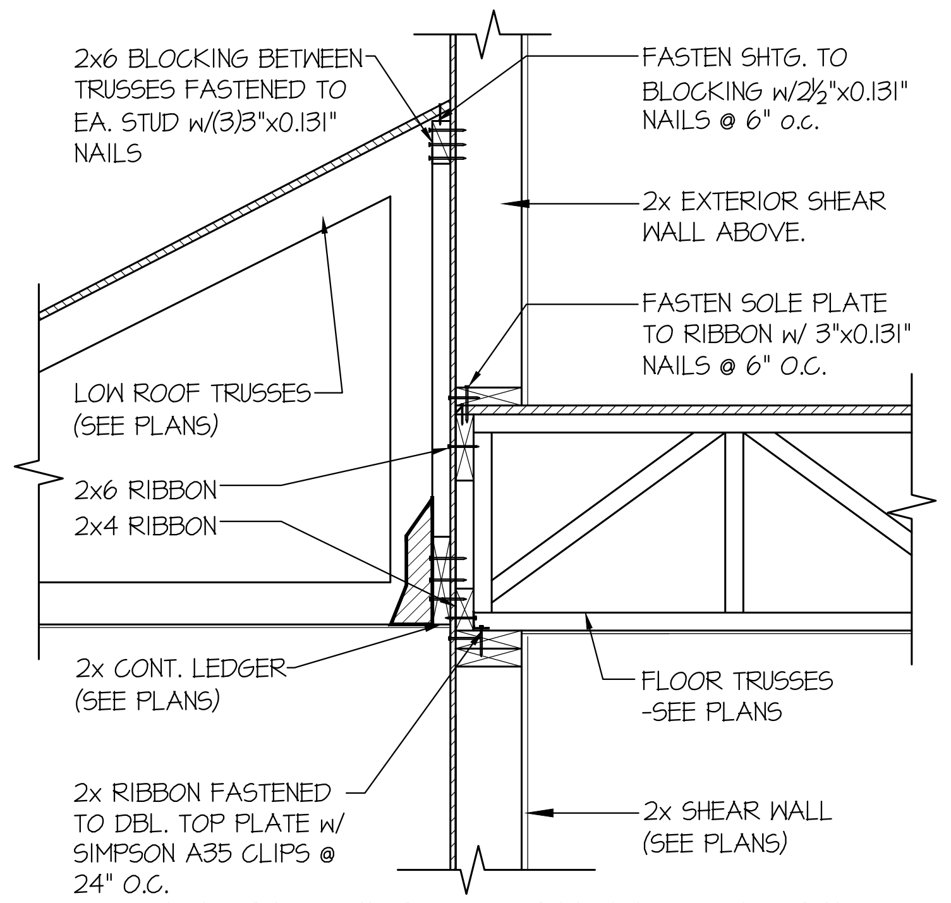
2x6 BLOCKING BETWEEN TRUSSES FASTENED TO EA. STUD w/(3)3"x0.131" NAILS
FASTEN SHTG. TO BLOCKING w/2½"x0.131" NAILS @ 6" o.c.
2x EXTERIOR SHEAR WALL ABOVE.
FASTEN SOLE PLATE TO RIBBON w/ 3"x0.131" NAILS @ 6" O.C.
LOW ROOF TRUSSES (SEE PLANS)
2x6 RIBBON
2x4 RIBBON
2x CONT. LEDGER (SEE PLANS)
FLOOR TRUSSES -SEE PLANS
2x RIBBON FASTENED TO DBL. TOP PLATE w/ SIMPSON A35 CLIPS @ 24" O.C.
2x SHEAR WALL (SEE PLANS)

63 TYPICAL SHEAR TRANSFER DETAIL BETWEEN FLOORS

SCALE: 3/4"=1'-0" PERPENDICULAR FRAMING

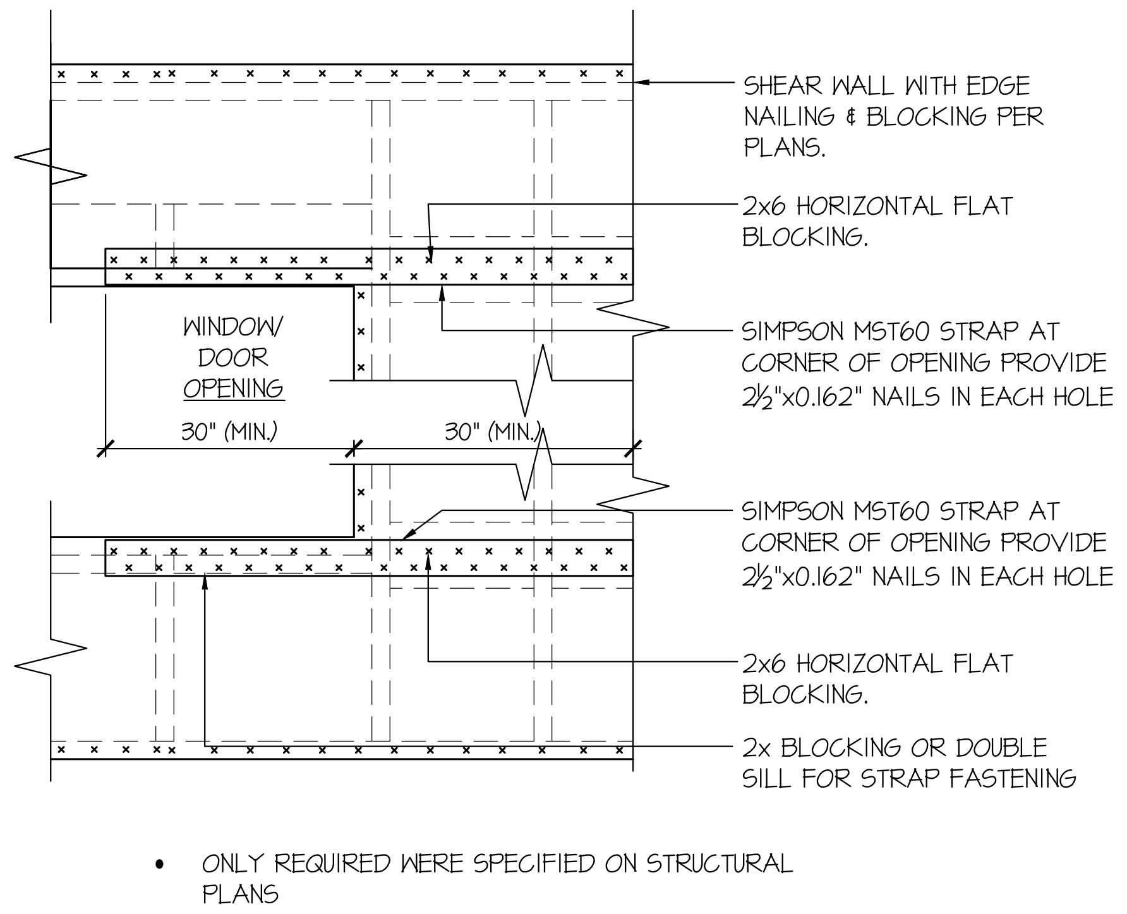
SHEAR WALL WITH EDGE NAILING & BLOCKING PER PLANS.
2x6 HORIZONTAL FLAT BLOCKING.
WINDOW/ DOOR OPENING
30" (MIN.)
30" (MIN.)
SIMPSON MST60 STRAP AT CORNER OF OPENING PROVIDE 2½"x0.162" NAILS IN EACH HOLE
SIMPSON MST60 STRAP AT CORNER OF OPENING PROVIDE 2½"x0.162" NAILS IN EACH HOLE
2x6 HORIZONTAL FLAT BLOCKING.
2x BLOCKING OR DOUBLE SILL FOR STRAP FASTENING

- ONLY REQUIRED WERE SPECIFIED ON STRUCTURAL PLANS

92 EXT. WALL & INT. SHEARWALL OPENING ELEVATION

SCALE: NTS

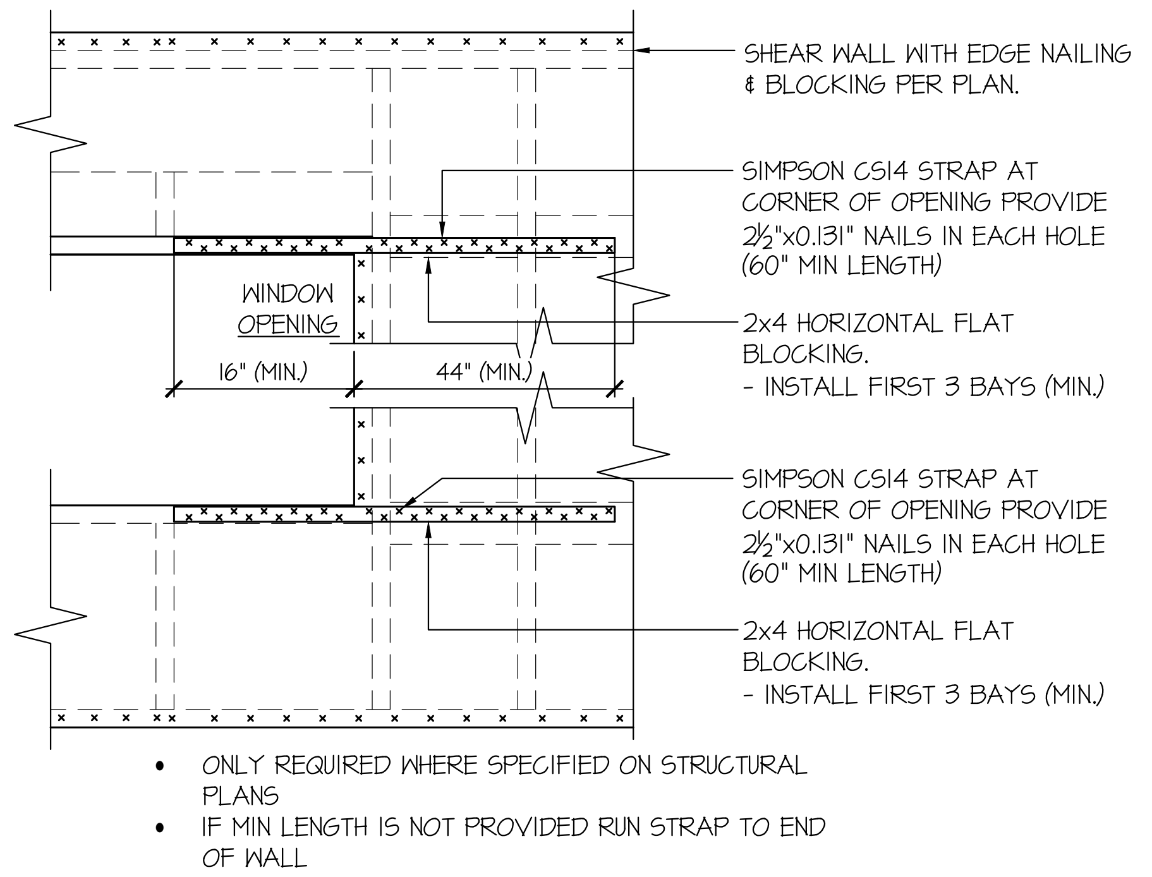
SHEAR WALL WITH EDGE NAILING & BLOCKING PER PLAN.
SIMPSON CS14 STRAP AT CORNER OF OPENING PROVIDE 2½"x0.131" NAILS IN EACH HOLE (60" MIN LENGTH)
WINDOW OPENING
16" (MIN.)
44" (MIN.)
2x4 HORIZONTAL FLAT BLOCKING.
- INSTALL FIRST 3 BAYS (MIN.)
SIMPSON CS14 STRAP AT CORNER OF OPENING PROVIDE 2½"x0.131" NAILS IN EACH HOLE (60" MIN LENGTH)
2x4 HORIZONTAL FLAT BLOCKING.
- INSTALL FIRST 3 BAYS (MIN.)

- ONLY REQUIRED WHERE SPECIFIED ON STRUCTURAL PLANS
- IF MIN LENGTH IS NOT PROVIDED RUN STRAP TO END OF WALL

93 EXT. WALL & INT. SHEARWALL OPENING ELEVATION

SCALE: NTS

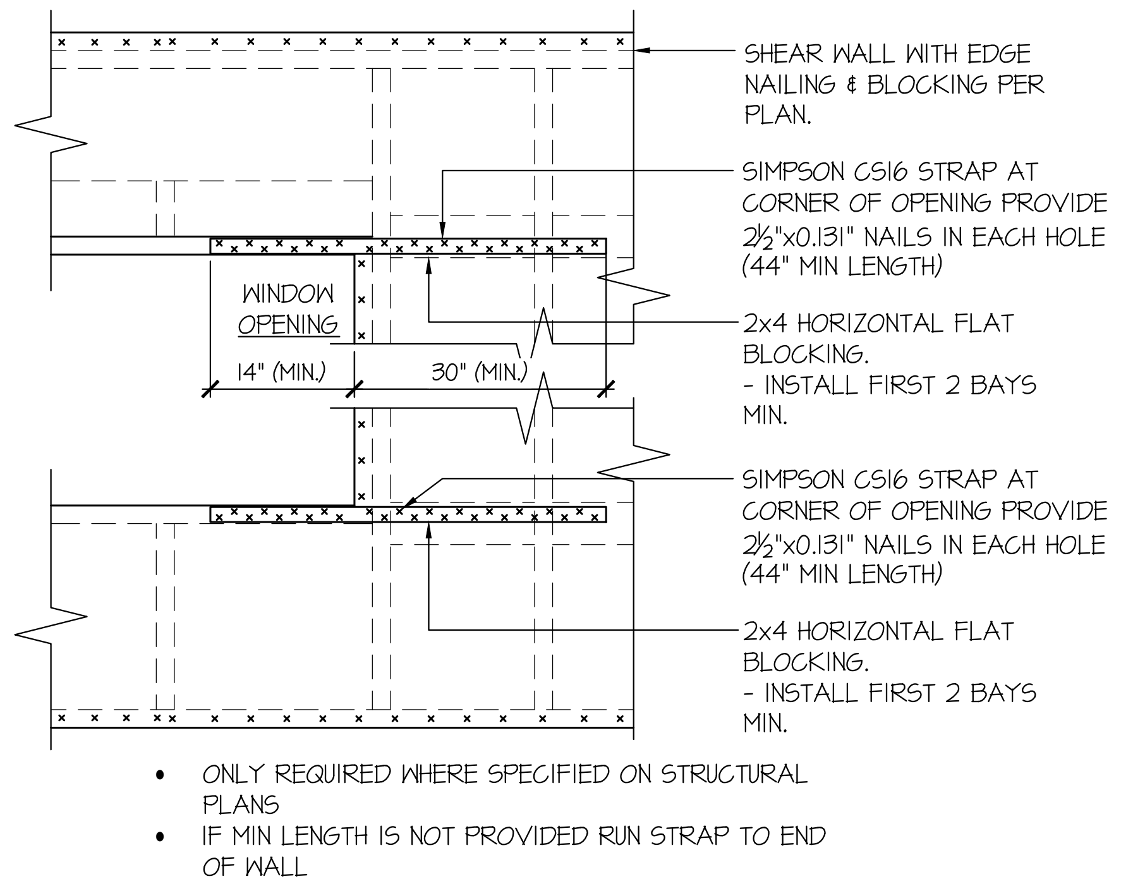
SHEAR WALL WITH EDGE NAILING & BLOCKING PER PLAN.
SIMPSON CS16 STRAP AT CORNER OF OPENING PROVIDE 2½"x0.131" NAILS IN EACH HOLE (44" MIN LENGTH)
WINDOW OPENING
14" (MIN.)
30" (MIN.)
2x4 HORIZONTAL FLAT BLOCKING.
- INSTALL FIRST 2 BAYS MIN.
SIMPSON CS16 STRAP AT CORNER OF OPENING PROVIDE 2½"x0.131" NAILS IN EACH HOLE (44" MIN LENGTH)
2x4 HORIZONTAL FLAT BLOCKING.
- INSTALL FIRST 2 BAYS MIN.

- ONLY REQUIRED WHERE SPECIFIED ON STRUCTURAL PLANS
- IF MIN LENGTH IS NOT PROVIDED RUN STRAP TO END OF WALL

94 EXT. WALL & INT. SHEARWALL OPENING ELEVATION

SCALE: NTS

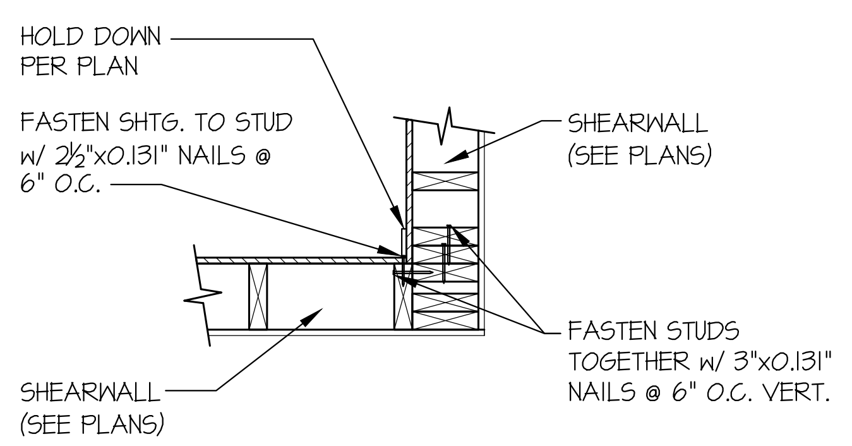
HOLD DOWN PER PLAN
FASTEN SHTG. TO STUD w/ 2½"x0.131" NAILS @ 6" O.C.
SHEARWALL (SEE PLANS)
FASTEN STUDS TOGETHER w/ 3"x0.131" NAILS @ 6" O.C. VERT.
SHEARWALL (SEE PLANS)

97 SHEAR TRANSFER DETAIL @ INTERSECTION

SCALE: 3/4"=1'-0"

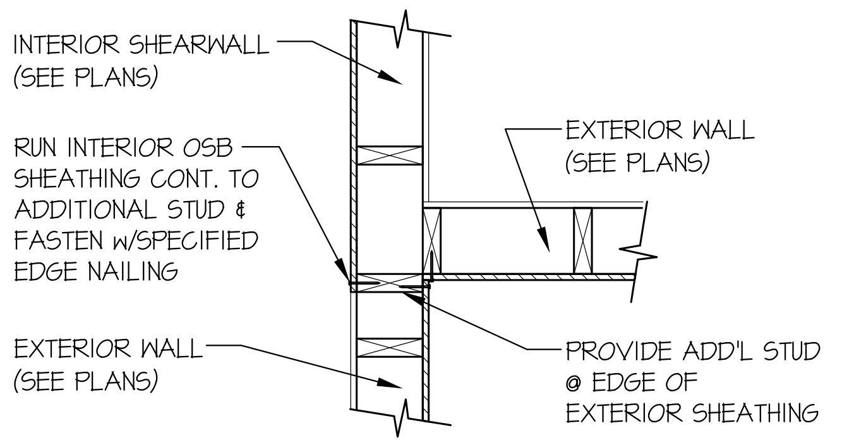
INTERIOR SHEARWALL (SEE PLANS)
RUN INTERIOR OSB SHEATHING CONT. TO ADDITIONAL STUD & FASTEN w/SPECIFIED EDGE NAILING
EXTERIOR WALL (SEE PLANS)
EXTERIOR WALL (SEE PLANS)
PROVIDE ADD'L STUD @ EDGE OF EXTERIOR SHEATHING

99 SHEAR TRANSFER DETAIL @ INTERSECTING INT. SHEARWALL

SCALE: 3/4"=1'-0" SHTG. OPPOSITE FACES

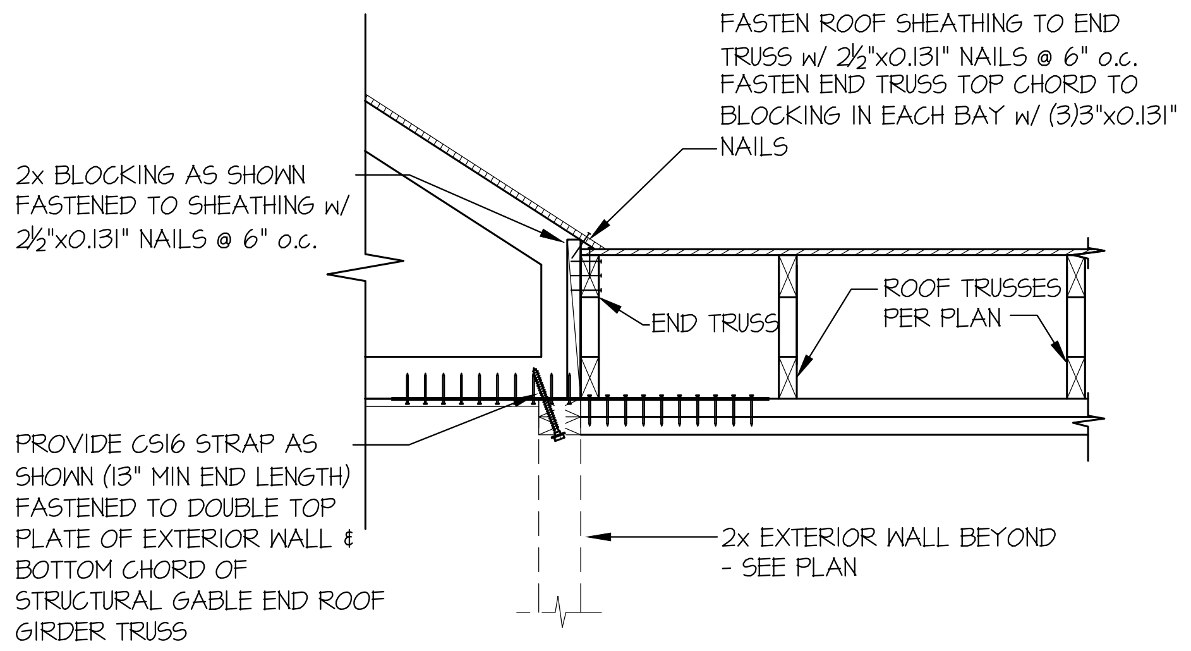
FASTEN ROOF SHEATHING TO END TRUSS w/ 2½"x0.131" NAILS @ 6" o.c. FASTEN END TRUSS TOP CHORD TO BLOCKING IN EACH BAY w/ (3)3"x0.131" NAILS
2x BLOCKING AS SHOWN FASTENED TO SHEATHING w/ 2½"x0.131" NAILS @ 6" o.c.
END TRUSS
ROOF TRUSSES PER PLAN
PROVIDE CS16 STRAP AS SHOWN (13" MIN END LENGTH) FASTENED TO DOUBLE TOP PLATE OF EXTERIOR WALL & BOTTOM CHORD OF STRUCTURAL GABLE END ROOF GIRDER TRUSS
2x EXTERIOR WALL BEYOND - SEE PLAN

117 STRAP DETAIL

SCALE: 3/4"=1'-0"

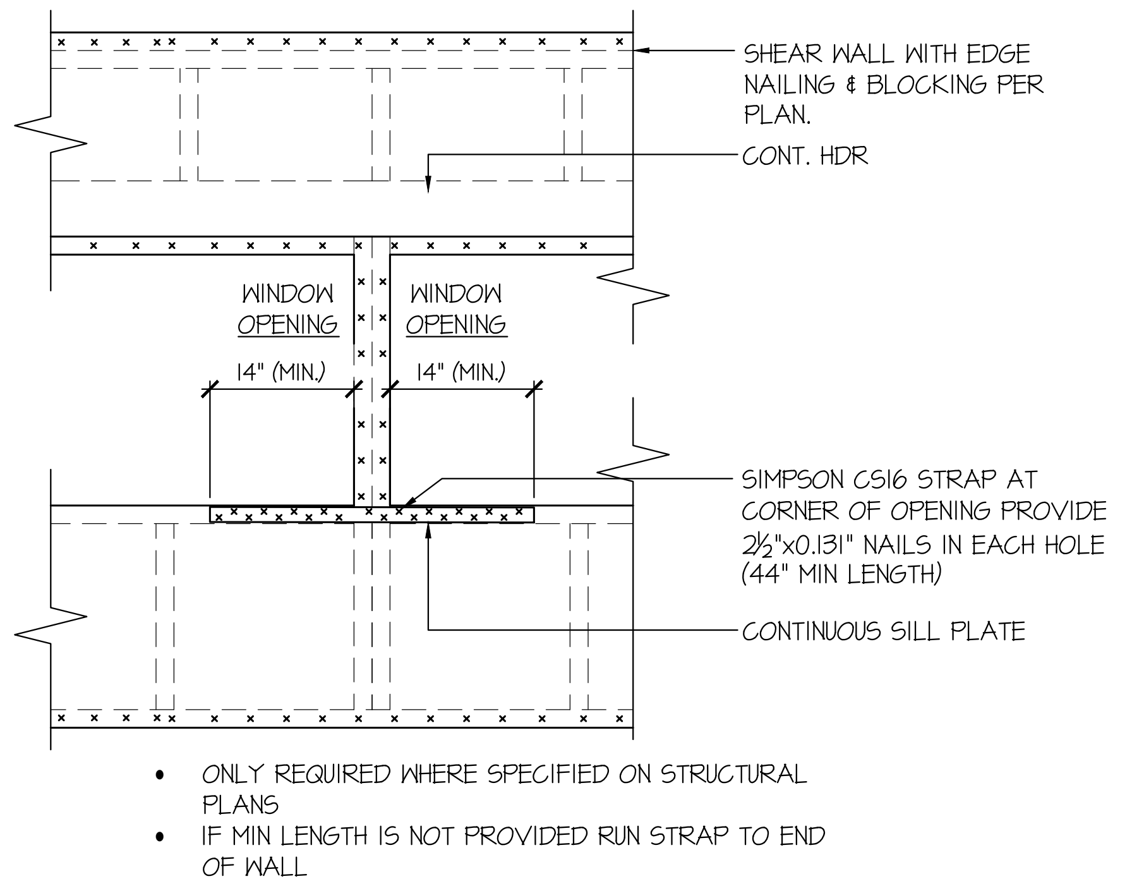
SHEAR WALL WITH EDGE NAILING & BLOCKING PER PLAN.
CONT. HDR
WINDOW OPENING
WINDOW OPENING
14" (MIN.)
14" (MIN.)
SIMPSON CS16 STRAP AT CORNER OF OPENING PROVIDE 2½"x0.131" NAILS IN EACH HOLE (44" MIN LENGTH)
CONTINUOUS SILL PLATE

- ONLY REQUIRED WHERE SPECIFIED ON STRUCTURAL PLANS
- IF MIN LENGTH IS NOT PROVIDED RUN STRAP TO END OF WALL

120 EXT. WALL & INT. SHEARWALL OPENING ELEVATION

SCALE: NTS

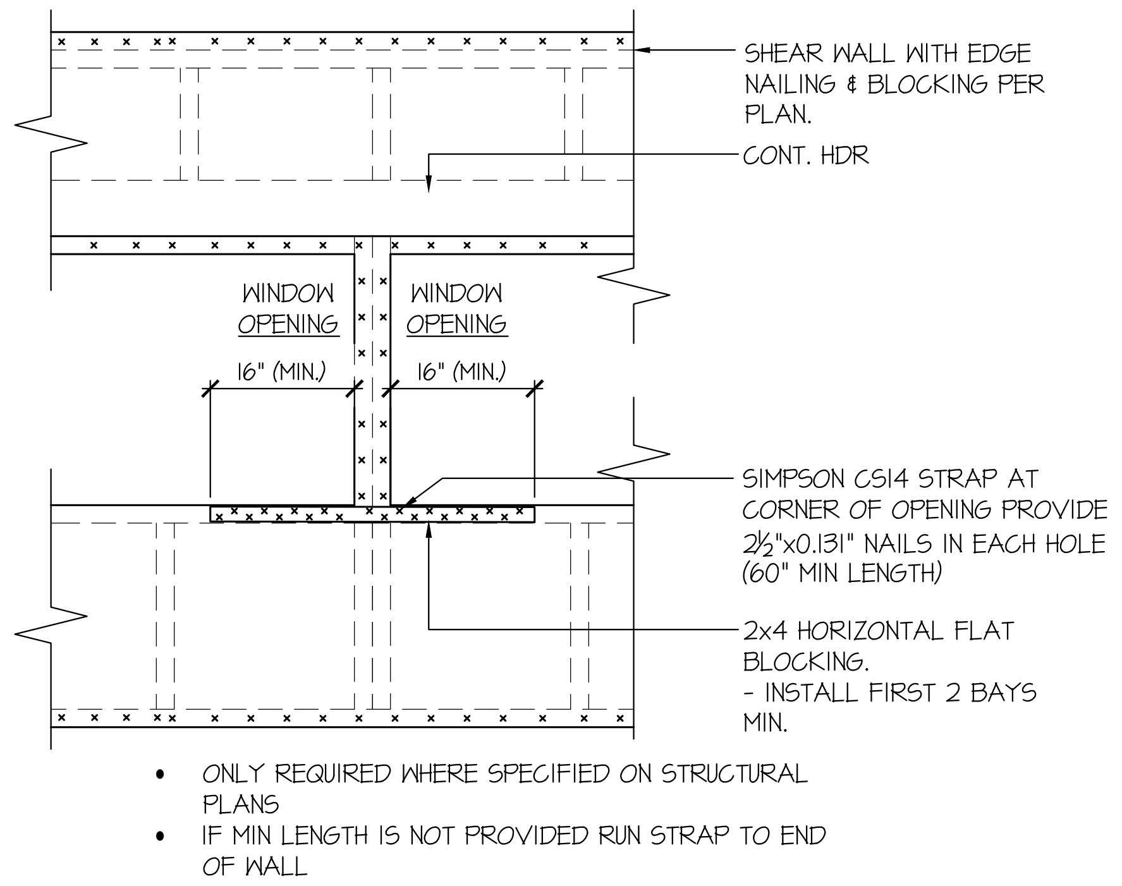
SHEAR WALL WITH EDGE NAILING & BLOCKING PER PLAN.
CONT. HDR
WINDOW OPENING
WINDOW OPENING
16" (MIN.)
16" (MIN.)
SIMPSON CS14 STRAP AT CORNER OF OPENING PROVIDE 2½"x0.131" NAILS IN EACH HOLE (60" MIN LENGTH)
2x4 HORIZONTAL FLAT BLOCKING.
- INSTALL FIRST 2 BAYS MIN.

- ONLY REQUIRED WHERE SPECIFIED ON STRUCTURAL PLANS
- IF MIN LENGTH IS NOT PROVIDED RUN STRAP TO END OF WALL

121 EXT. WALL & INT. SHEARWALL OPENING ELEVATION

SCALE: NTS

seal:
RICHARD ZABEL
21031615

© copyright : MULHERN & KULP Structural Engineering, Inc.

MULHERN+KULP
RESIDENTIAL STRUCTURAL ENGINEERING
7220 Trade Street, Suite 295, San Diego, CA 92121
p 619-650-0010 ▸ mulhernkulp.com

M&K project number: 154-23017

project mgr: RJZ
drawn by: BFD
issue date: 01-18-24

REVISIONS:

date:	initial:
07/17/2024 ARCH REVISIONS	AJC

JAYMARC
HOMES

STRUCTURAL DETAILS
4104 83RD AVE SE
MERCER ISLAND, WASHINGTON

sheet:
LB-2

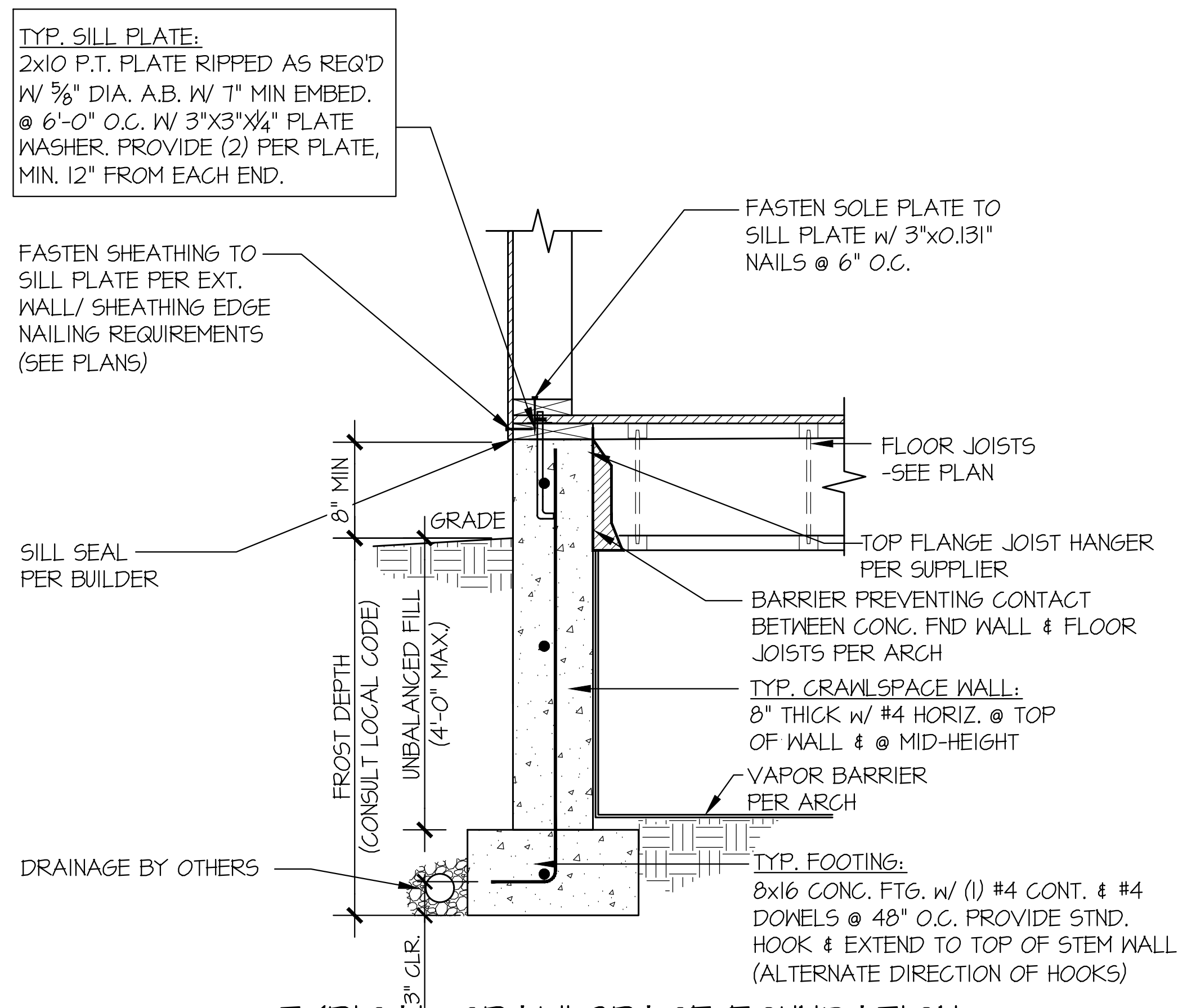
TYP. SILL PLATE:
2x10 P.T. PLATE RIPPED AS REQ'D W/ 5/8" DIA. A.B. W/ 7" MIN EMBED. @ 6'-0" O.C. W/ 3"X3"X1/4" PLATE WASHER. PROVIDE (2) PER PLATE, MIN. 12" FROM EACH END.
FASTEN SOLE PLATE TO SILL PLATE w/ 3"x0.131" NAILS @ 6" O.C.
FASTEN SHEATHING TO SILL PLATE PER EXT. WALL/ SHEATHING EDGE NAILING REQUIREMENTS (SEE PLANS)
FLOOR JOISTS -SEE PLAN
8" MIN
GRADE
SILL SEAL PER BUILDER
TOP FLANGE JOIST HANGER PER SUPPLIER
BARRIER PREVENTING CONTACT BETWEEN CONC. FND WALL & FLOOR JOISTS PER ARCH
FROST DEPTH (CONSULT LOCAL CODE)
UNBALANCED FILL (4'-0" MAX.)
TYP. CRAWLSPACE WALL:
8" THICK w/ #4 HORIZ. @ TOP OF WALL & @ MID-HEIGHT
VAPOR BARRIER PER ARCH
DRAINAGE BY OTHERS
TYP. FOOTING:
8x16 CONC. FTG. w/ (1) #4 CONT. & #4 DOWELS @ 48" O.C. PROVIDE STND. HOOK & EXTEND TO TOP OF STEM WALL (ALTERNATE DIRECTION OF HOOKS)
3" CLR.

1 TYPICAL CRAWLSPACE FOUNDATION

SCALE: 3/4"=1'-0"

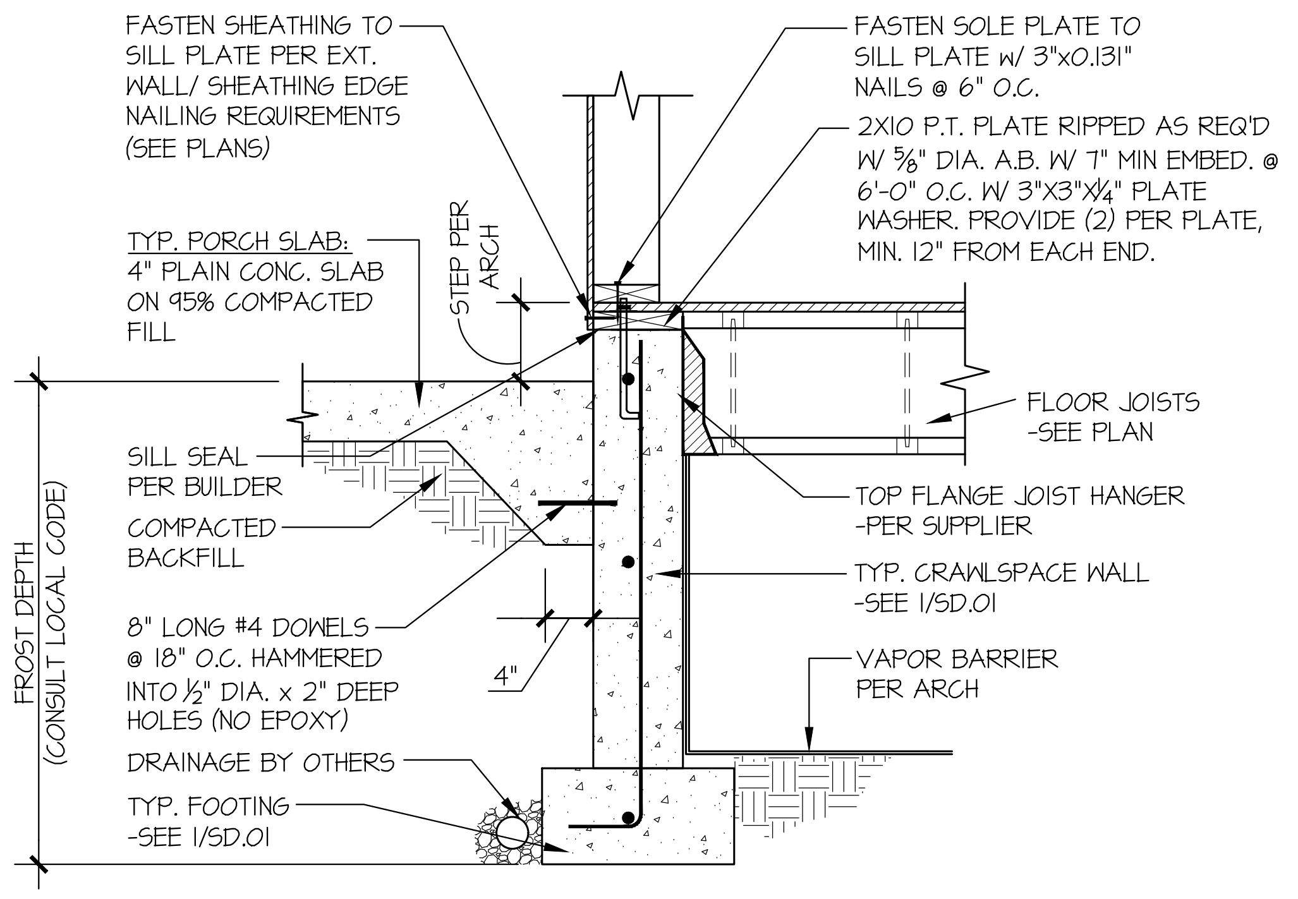
FASTEN SHEATHING TO SILL PLATE PER EXT. WALL/ SHEATHING EDGE NAILING REQUIREMENTS (SEE PLANS)
FASTEN SOLE PLATE TO SILL PLATE w/ 3"x0.131" NAILS @ 6" O.C.
2X10 P.T. PLATE RIPPED AS REQ'D W/ 5/8" DIA. A.B. W/ 7" MIN EMBED. @ 6'-0" O.C. W/ 3"X3"X1/4" PLATE WASHER. PROVIDE (2) PER PLATE, MIN. 12" FROM EACH END.
TYP. PORCH SLAB:
4" PLAIN CONC. SLAB ON 95% COMPACTED FILL
STEP PER ARCH
FLOOR JOISTS -SEE PLAN
SILL SEAL PER BUILDER
COMPACTED BACKFILL
TOP FLANGE JOIST HANGER -PER SUPPLIER
TYP. CRAWLSPACE WALL -SEE 1/SD.01
FROST DEPTH (CONSULT LOCAL CODE)
8" LONG #4 DOWELS @ 18" O.C. HAMMERED INTO 1/2" DIA. x 2" DEEP HOLES (NO EPOXY)
4"
VAPOR BARRIER PER ARCH
DRAINAGE BY OTHERS
TYP. FOOTING -SEE 1/SD.01

2 TYPICAL CRAWLSPACE FOUNDATION

SCALE: 3/4"=1'-0" **@ PORCH SLAB**

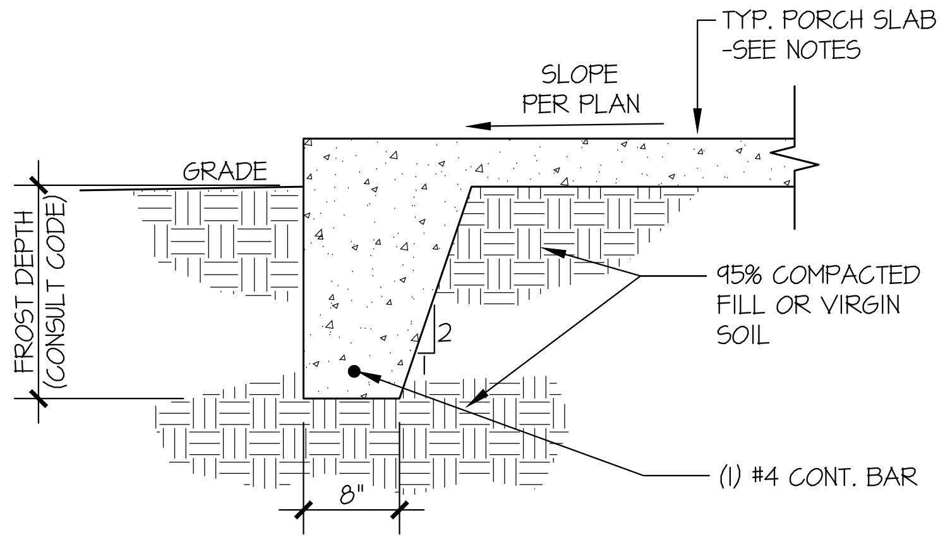
TYP. PORCH SLAB -SEE NOTES
SLOPE PER PLAN
GRADE
FROST DEPTH (CONSULT CODE)
95% COMPACTED FILL OR VIRGIN SOIL
2
1
(1) #4 CONT. BAR
8"

3 TYPICAL FOOTING @ PORCH SLAB

SCALE: 3/4"=1'-0"

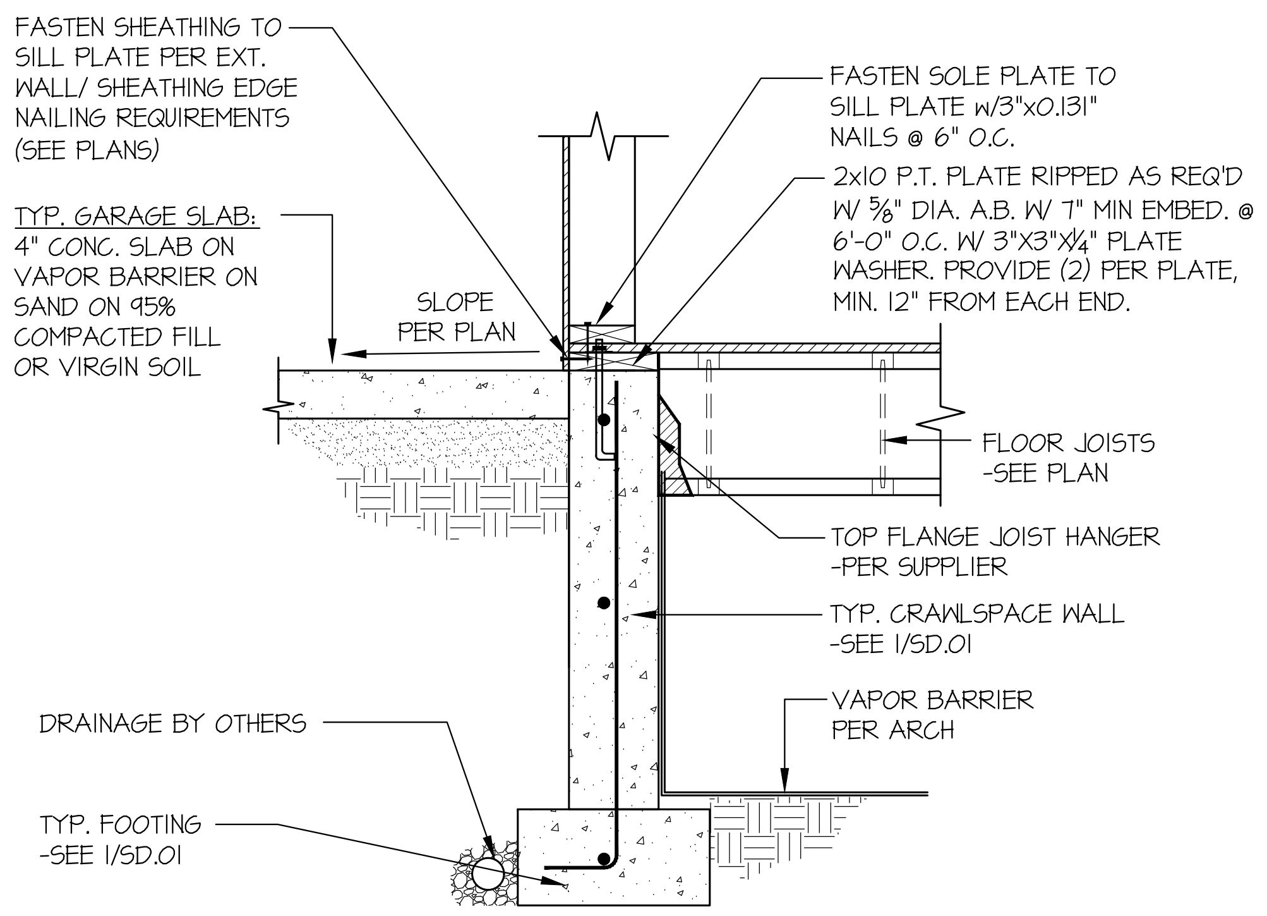
FASTEN SHEATHING TO SILL PLATE PER EXT. WALL/ SHEATHING EDGE NAILING REQUIREMENTS (SEE PLANS)
FASTEN SOLE PLATE TO SILL PLATE w/3"x0.131" NAILS @ 6" O.C.
2x10 P.T. PLATE RIPPED AS REQ'D W/ 5/8" DIA. A.B. W/ 7" MIN EMBED. @ 6'-0" O.C. W/ 3"X3"X1/4" PLATE WASHER. PROVIDE (2) PER PLATE, MIN. 12" FROM EACH END.
TYP. GARAGE SLAB:
4" CONC. SLAB ON VAPOR BARRIER ON SAND ON 95% COMPACTED FILL OR VIRGIN SOIL
SLOPE PER PLAN
FLOOR JOISTS -SEE PLAN
TOP FLANGE JOIST HANGER -PER SUPPLIER
TYP. CRAWLSPACE WALL -SEE 1/SD.01
VAPOR BARRIER PER ARCH
DRAINAGE BY OTHERS
TYP. FOOTING -SEE 1/SD.01

4 TYPICAL CRAWLSPACE FOUNDATION @ GARAGE

SCALE: 3/4"=1'-0"

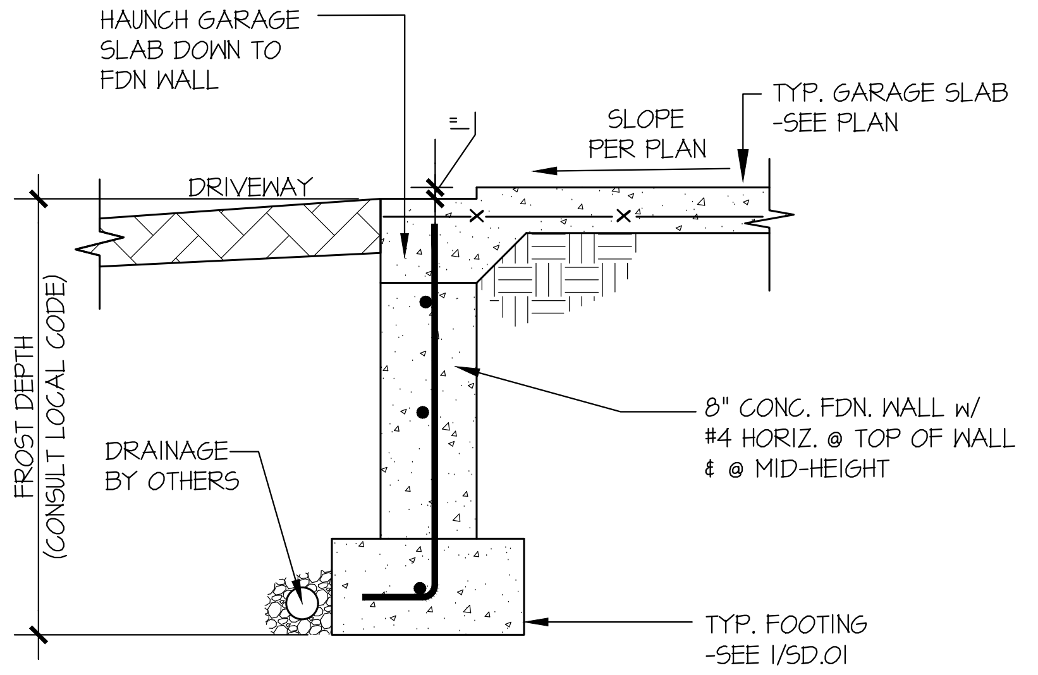
HAUNCH GARAGE SLAB DOWN TO FDN WALL
TYP. GARAGE SLAB -SEE PLAN
SLOPE PER PLAN
DRIVEWAY
FROST DEPTH (CONSULT LOCAL CODE)
8" CONC. FDN. WALL w/ #4 HORIZ. @ TOP OF WALL & @ MID-HEIGHT
DRAINAGE BY OTHERS
TYP. FOOTING -SEE 1/SD.01

5 TYPICAL CONCRETE FOOTING @ GARAGE DOOR OPENING

SCALE: 3/4"=1'-0"

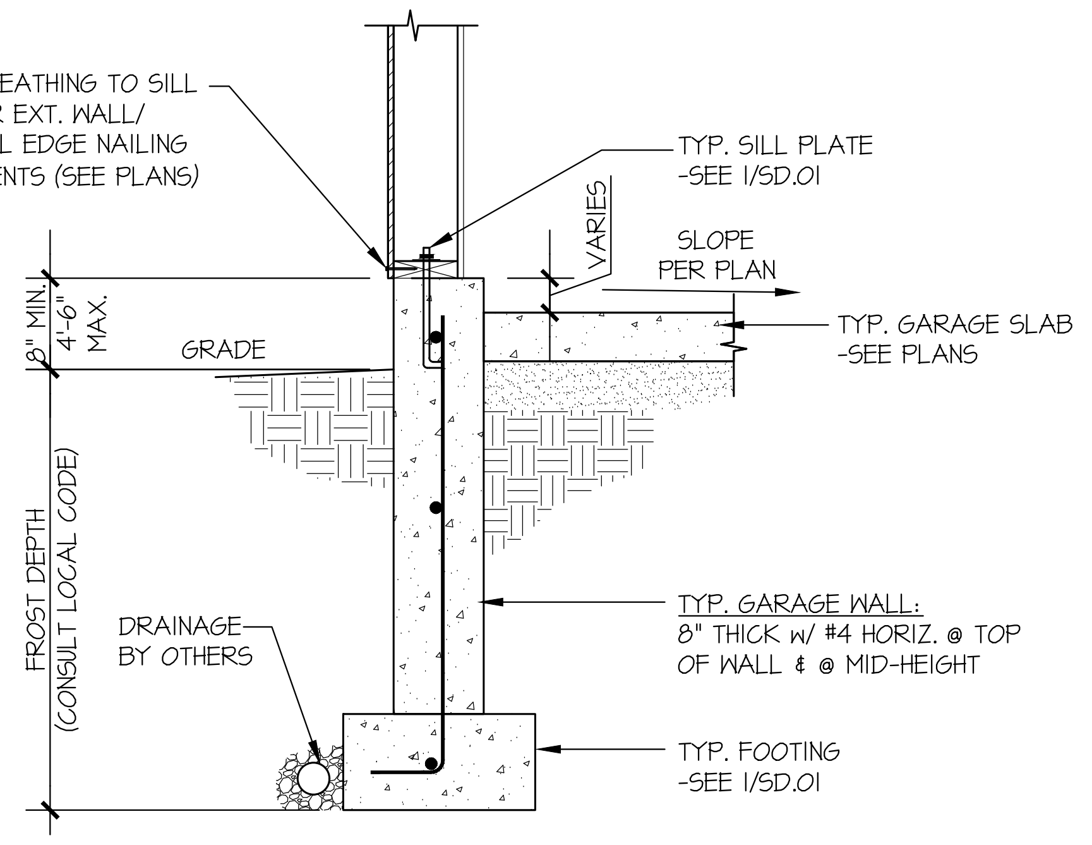
FASTEN SHEATHING TO SILL PLATE PER EXT. WALL/ SHEARWALL EDGE NAILING REQUIREMENTS (SEE PLANS)
TYP. SILL PLATE -SEE 1/SD.01
VARIES
SLOPE PER PLAN
TYP. GARAGE SLAB -SEE PLANS
8" MIN. 4'-6" MAX.
GRADE
FROST DEPTH (CONSULT LOCAL CODE)
TYP. GARAGE WALL:
8" THICK w/ #4 HORIZ. @ TOP OF WALL & @ MID-HEIGHT
DRAINAGE BY OTHERS
TYP. FOOTING -SEE 1/SD.01

6 TYPICAL EXT. GARAGE FOUNDATION

SCALE: 3/4"=1'-0"

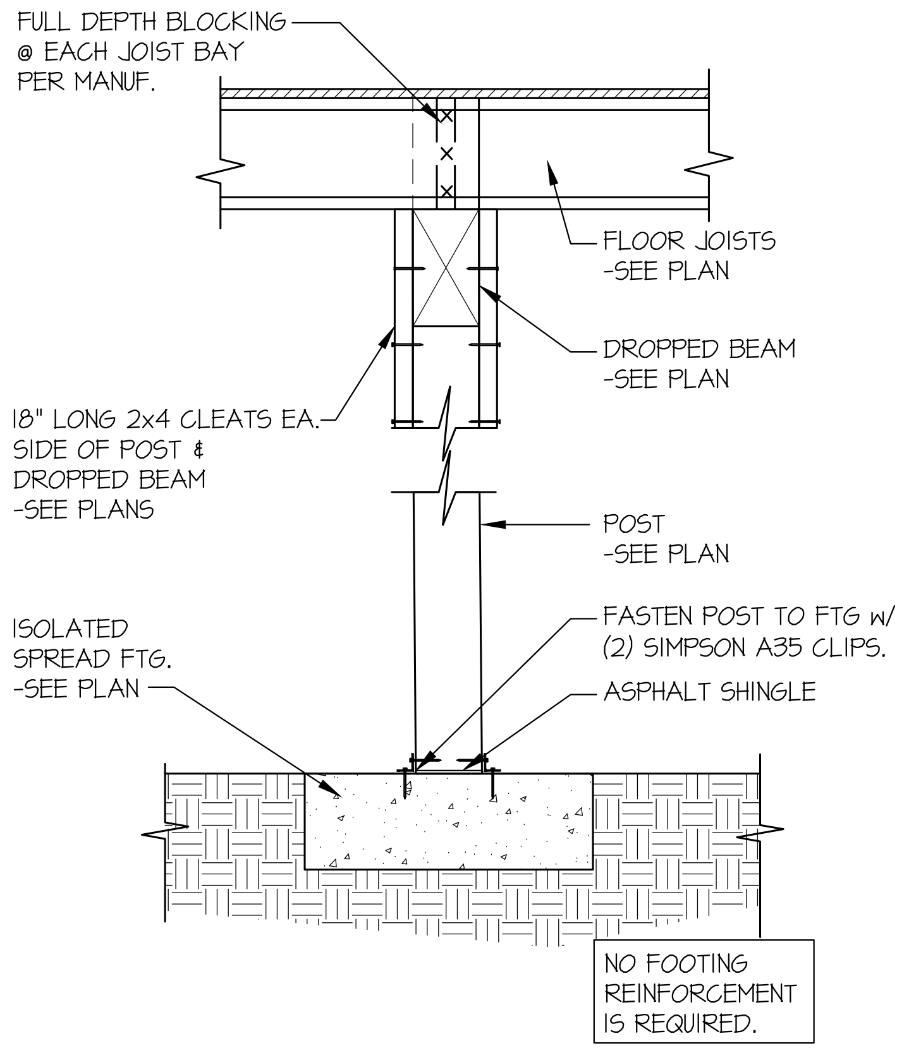
FULL DEPTH BLOCKING @ EACH JOIST BAY PER MANUF.
FLOOR JOISTS -SEE PLAN
DROPPED BEAM -SEE PLAN
18" LONG 2x4 CLEATS EA. SIDE OF POST & DROPPED BEAM -SEE PLANS
POST -SEE PLAN
ISOLATED SPREAD FTG. -SEE PLAN
FASTEN POST TO FTG w/ (2) SIMPSON A35 CLIPS.
ASPHALT SHINGLE
NO FOOTING REINFORCEMENT IS REQUIRED.

7 TYPICAL CRAWL SPACE FOOTING DETAIL

SCALE: 3/4"=1'-0"

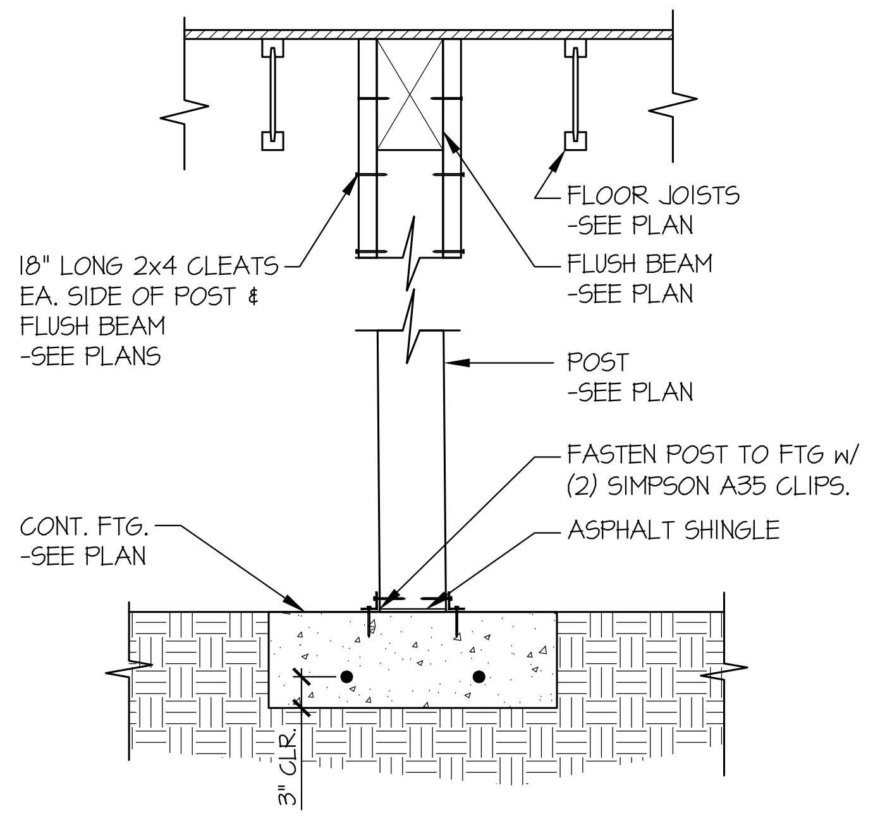
FLOOR JOISTS -SEE PLAN
18" LONG 2x4 CLEATS EA. SIDE OF POST & FLUSH BEAM -SEE PLANS
FLUSH BEAM -SEE PLAN
POST -SEE PLAN
FASTEN POST TO FTG w/ (2) SIMPSON A35 CLIPS.
CONT. FTG. -SEE PLAN
ASPHALT SHINGLE
3" CLR.

7A TYPICAL CRAWL SPACE FOOTING DETAIL

SCALE: 3/4"=1'-0"

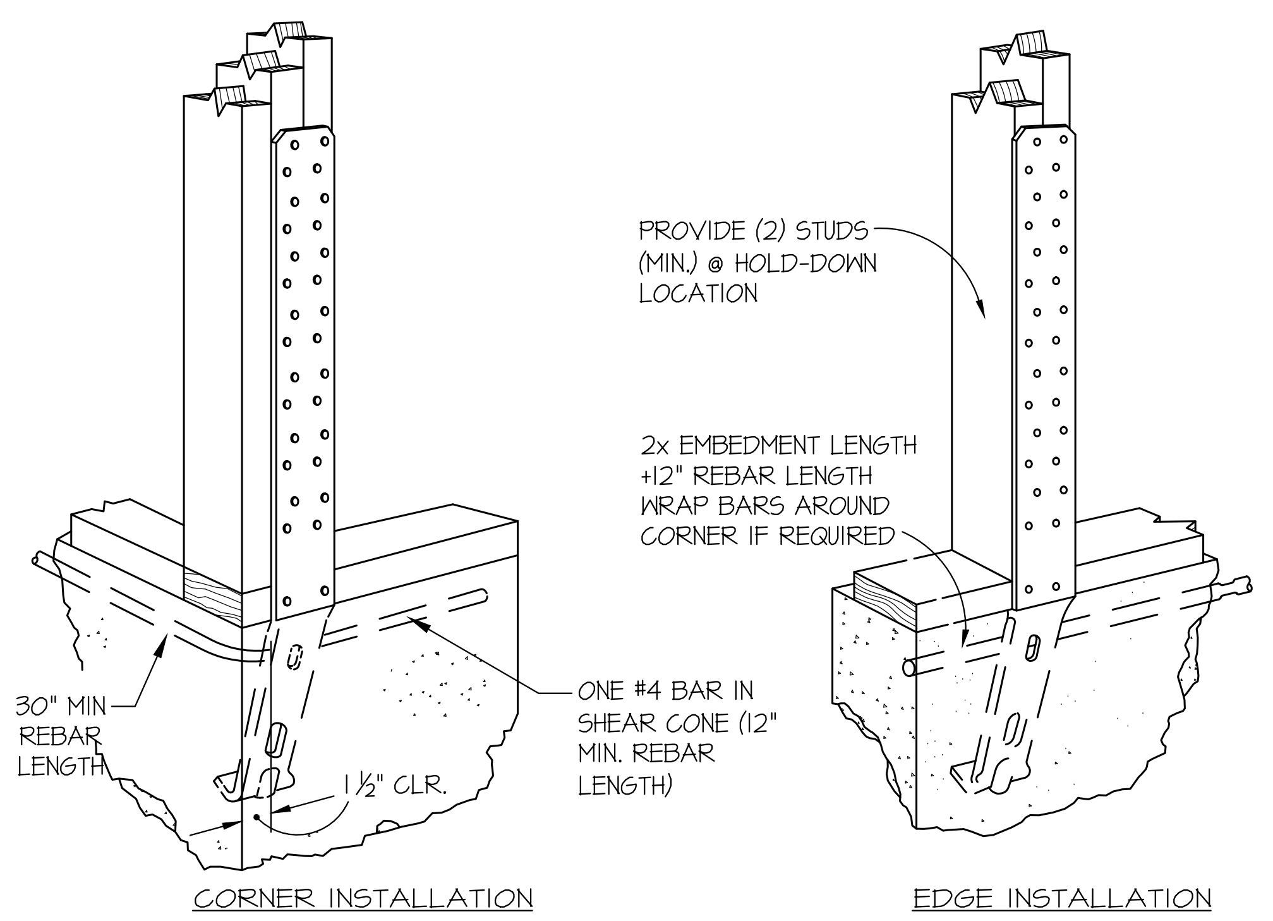
PROVIDE (2) STUDS (MIN.) @ HOLD-DOWN LOCATION
2x EMBEDMENT LENGTH +12" REBAR LENGTH WRAP BARS AROUND CORNER IF REQUIRED
30" MIN REBAR LENGTH
ONE #4 BAR IN SHEAR CONE (12" MIN. REBAR LENGTH)
1 1/2" CLR.

CORNER INSTALLATION

EDGE INSTALLATION

A TYPICAL HOLD-DOWN INSTALLATION

NOT TO SCALE

SIMPSON STHD HD
@ FOUNDATION

seal:
RICHARD ZABEL
21031615

© copyright : MULHERN & KULP
Structural Engineering, Inc.

MULHERN+KULP
RESIDENTIAL STRUCTURAL ENGINEERING
7220 Trade Street, Suite 295, San Diego, CA 92121
p 619-650-0010 ▸ *mulhernkulp.com*

M&K project number: 154-23017

project mgr: RJZ
drawn by: BFD
issue date: 01-18-24

REVISIONS:

date:	initial:
07/17/2024 ARCH REVISIONS	AJC

JAYMARC HOMES

STRUCTURAL DETAILS

4104 83RD AVE SE
MERCER ISLAND, WASHINGTON

sheet:
SD.01

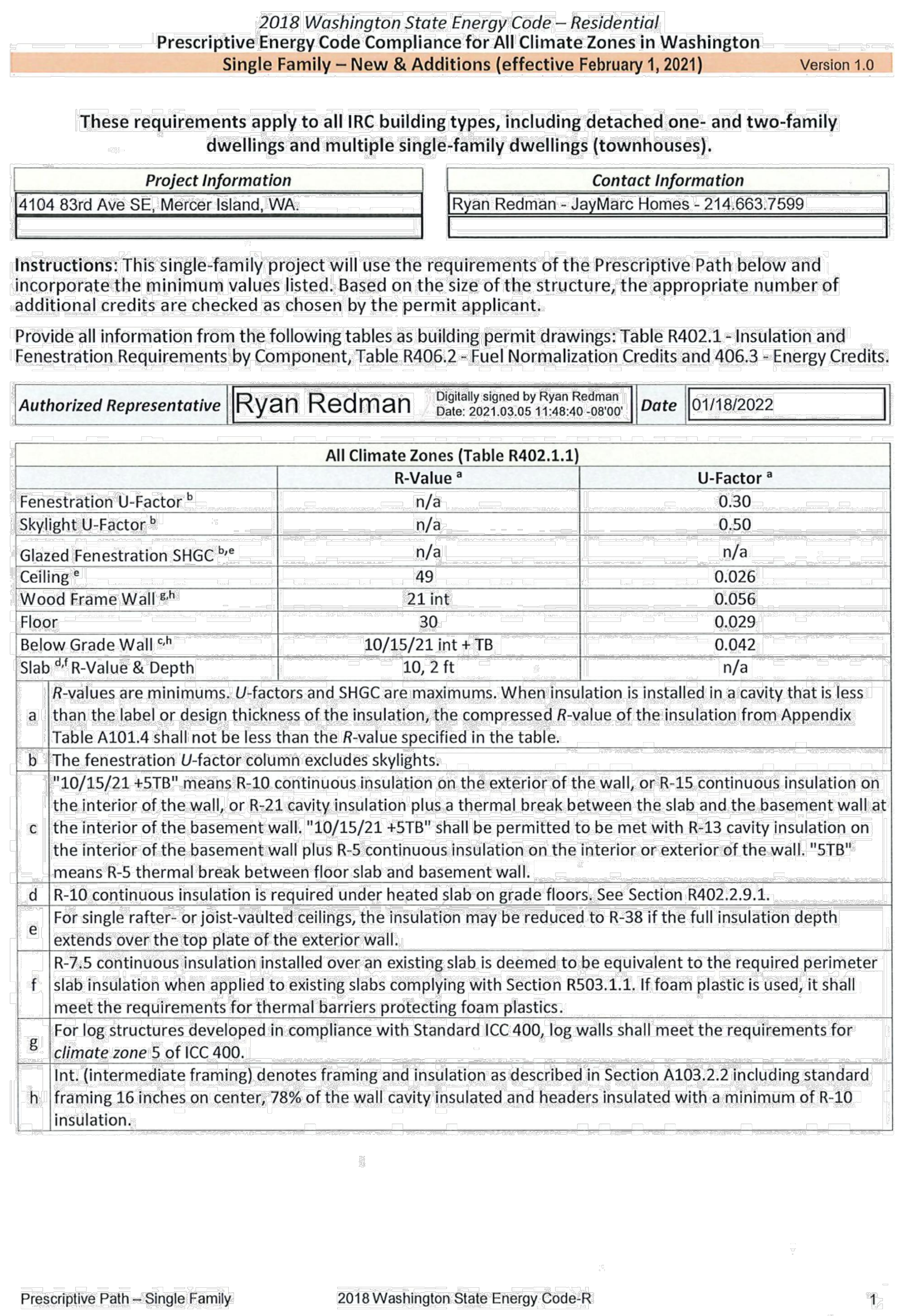

2018 Washington State Energy Code – Residential
Prescriptive Energy Code Compliance for All Climate Zones in Washington
Single Family – New & Additions (effective February 1, 2021) Version 1.0

These requirements apply to all IRC building types, including detached one- and two-family dwellings and multiple single-family dwellings (townhouses).

Project Information	*Contact Information*
4104 83rd Ave SE, Mercer Island, WA.	Ryan Redman - JayMarc Homes - 214.663.7599

Instructions: This single-family project will use the requirements of the Prescriptive Path below and incorporate the minimum values listed. Based on the size of the structure, the appropriate number of additional credits are checked as chosen by the permit applicant.

Provide all information from the following tables as building permit drawings: Table R402.1 - Insulation and Fenestration Requirements by Component, Table R406.2 - Fuel Normalization Credits and 406.3 - Energy Credits.

Authorized Representative	Ryan Redman Digitally signed by Ryan Redman Date: 2021.03.05 11:48:40 -08'00'	*Date*	01/18/2022

All Climate Zones (Table R402.1.1)

	R-Value [a]	U-Factor [a]
Fenestration U-Factor [b]	n/a	0.30
Skylight U-Factor [b]	n/a	0.50
Glazed Fenestration SHGC [b,e]	n/a	n/a
Ceiling [e]	49	0.026
Wood Frame Wall [g,h]	21 int	0.056
Floor	30	0.029
Below Grade Wall [c,h]	10/15/21 int + TB	0.042
Slab [d,f] R-Value & Depth	10, 2 ft	n/a

a	*R*-values are minimums. *U*-factors and SHGC are maximums. When insulation is installed in a cavity that is less than the label or design thickness of the insulation, the compressed *R*-value of the insulation from Appendix Table A101.4 shall not be less than the *R*-value specified in the table.
b	The fenestration *U*-factor column excludes skylights.
c	"10/15/21 +5TB" means R-10 continuous insulation on the exterior of the wall, or R-15 continuous insulation on the interior of the wall, or R-21 cavity insulation plus a thermal break between the slab and the basement wall at the interior of the basement wall. "10/15/21 +5TB" shall be permitted to be met with R-13 cavity insulation on the interior of the basement wall plus R-5 continuous insulation on the interior or exterior of the wall. "5TB" means R-5 thermal break between floor slab and basement wall.
d	R-10 continuous insulation is required under heated slab on grade floors. See Section R402.2.9.1.
e	For single rafter- or joist-vaulted ceilings, the insulation may be reduced to R-38 if the full insulation depth extends over the top plate of the exterior wall.
f	R-7.5 continuous insulation installed over an existing slab is deemed to be equivalent to the required perimeter slab insulation when applied to existing slabs complying with Section R503.1.1. If foam plastic is used, it shall meet the requirements for thermal barriers protecting foam plastics.
g	For log structures developed in compliance with Standard ICC 400, log walls shall meet the requirements for *climate zone* 5 of ICC 400.
h	Int. (intermediate framing) denotes framing and insulation as described in Section A103.2.2 including standard framing 16 inches on center, 78% of the wall cavity insulated and headers insulated with a minimum of R-10 insulation.

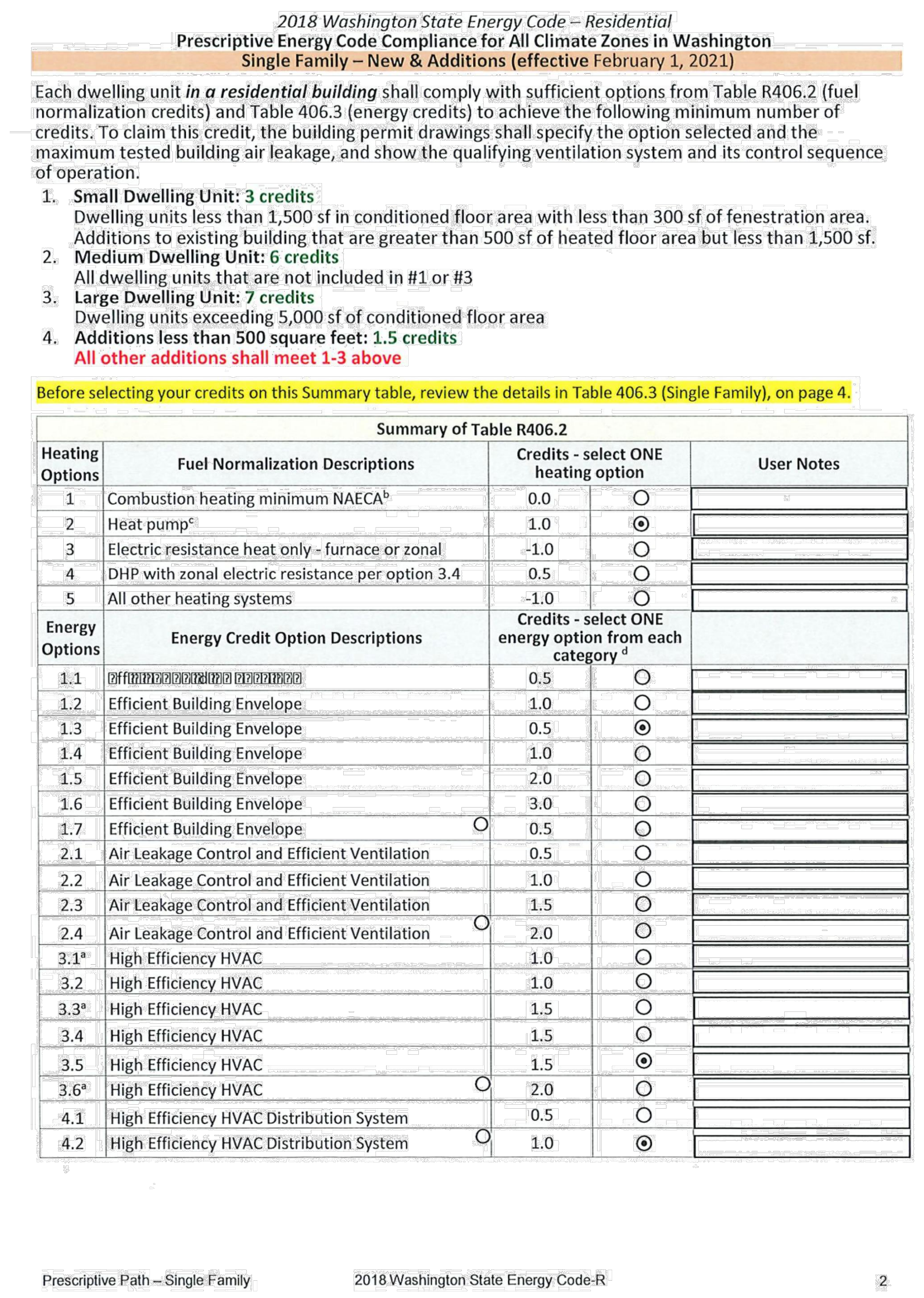

2018 Washington State Energy Code – Residential
Prescriptive Energy Code Compliance for All Climate Zones in Washington
Single Family – New & Additions (effective February 1, 2021)

Each dwelling unit ***in a residential building*** shall comply with sufficient options from Table R406.2 (fuel normalization credits) and Table 406.3 (energy credits) to achieve the following minimum number of credits. To claim this credit, the building permit drawings shall specify the option selected and the maximum tested building air leakage, and show the qualifying ventilation system and its control sequence of operation.

1. **Small Dwelling Unit:** **3 credits**
   Dwelling units less than 1,500 sf in conditioned floor area with less than 300 sf of fenestration area. Additions to existing building that are greater than 500 sf of heated floor area but less than 1,500 sf.
2. **Medium Dwelling Unit:** **6 credits**
   All dwelling units that are not included in #1 or #3
3. **Large Dwelling Unit:** **7 credits**
   Dwelling units exceeding 5,000 sf of conditioned floor area
4. **Additions less than 500 square feet:** **1.5 credits**
   All other additions shall meet 1-3 above

Before selecting your credits on this Summary table, review the details in Table 406.3 (Single Family), on page 4.

Summary of Table R406.2

Heating Options	Fuel Normalization Descriptions	Credits - select ONE heating option		User Notes
1	Combustion heating minimum NAECA[b]	0.0	○	
2	Heat pump[c]	1.0	●	
3	Electric resistance heat only - furnace or zonal	-1.0	○	
4	DHP with zonal electric resistance per option 3.4	0.5	○	
5	All other heating systems	-1.0	○	
Energy Options	**Energy Credit Option Descriptions**	**Credits - select ONE energy option from each category [d]**		
1.1	[illegible]	0.5	○	
1.2	Efficient Building Envelope	1.0	○	
1.3	Efficient Building Envelope	0.5	●	
1.4	Efficient Building Envelope	1.0	○	
1.5	Efficient Building Envelope	2.0	○	
1.6	Efficient Building Envelope	3.0	○	
1.7	Efficient Building Envelope ○	0.5	○	
2.1	Air Leakage Control and Efficient Ventilation	0.5	○	
2.2	Air Leakage Control and Efficient Ventilation	1.0	○	
2.3	Air Leakage Control and Efficient Ventilation	1.5	○	
2.4	Air Leakage Control and Efficient Ventilation ○	2.0	○	
3.1[a]	High Efficiency HVAC	1.0	○	
3.2	High Efficiency HVAC	1.0	○	
3.3[a]	High Efficiency HVAC	1.5	○	
3.4	High Efficiency HVAC	1.5	○	
3.5	High Efficiency HVAC	1.5	●	
3.6[a]	High Efficiency HVAC ○	2.0	○	
4.1	High Efficiency HVAC Distribution System	0.5	○	
4.2	High Efficiency HVAC Distribution System ○	1.0	●	

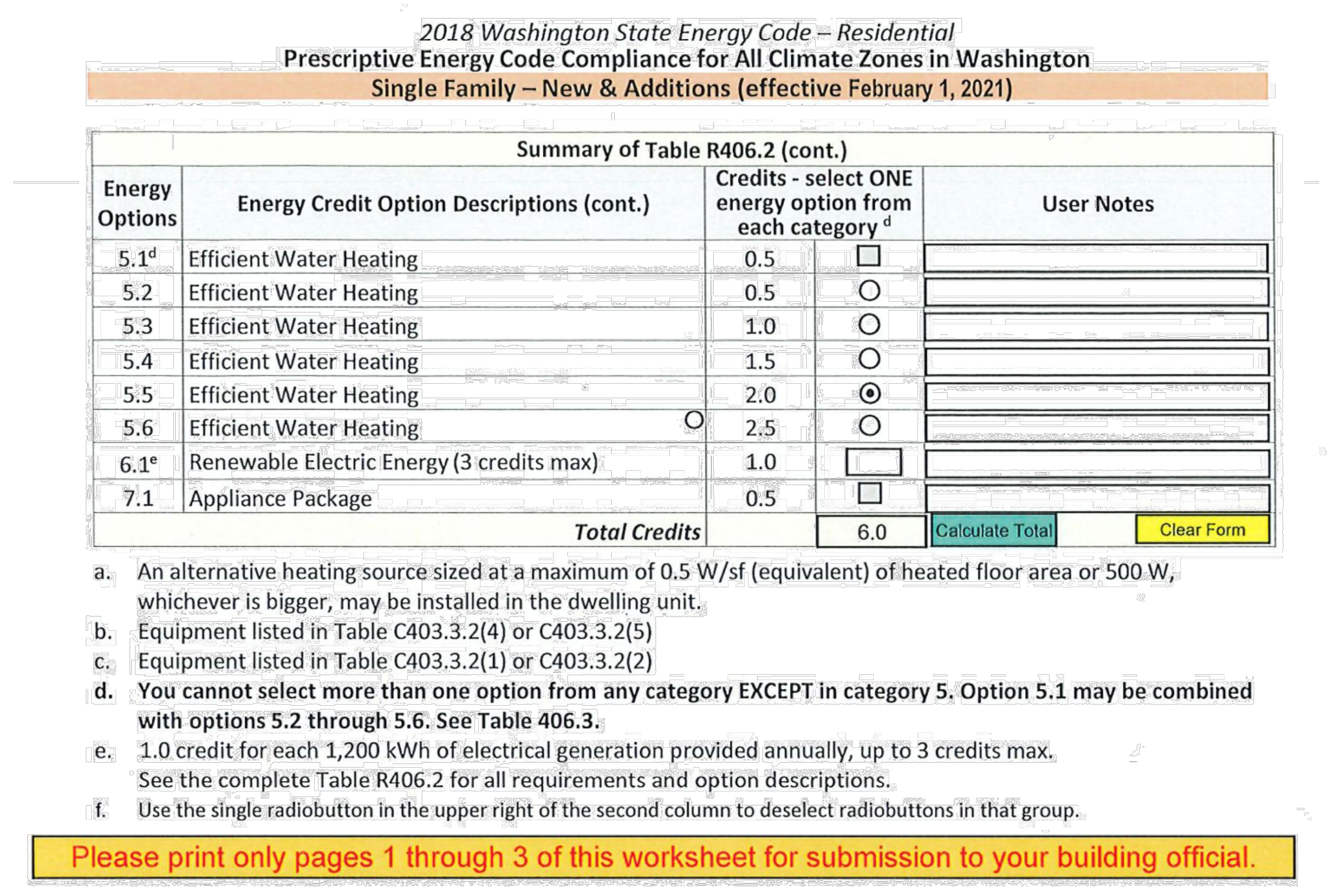

2018 Washington State Energy Code – Residential
Prescriptive Energy Code Compliance for All Climate Zones in Washington
Single Family – New & Additions (effective February 1, 2021)

Summary of Table R406.2 (cont.)

Energy Options	Energy Credit Option Descriptions (cont.)	Credits - select ONE energy option from each category [d]		User Notes
5.1[d]	Efficient Water Heating	0.5	☐	
5.2	Efficient Water Heating	0.5	○	
5.3	Efficient Water Heating	1.0	○	
5.4	Efficient Water Heating	1.5	○	
5.5	Efficient Water Heating	2.0	●	
5.6	Efficient Water Heating ○	2.5	○	
6.1[e]	Renewable Electric Energy (3 credits max)	1.0	☐	
7.1	Appliance Package	0.5	☐	
	Total Credits		6.0	Calculate Total Clear Form

a. An alternative heating source sized at a maximum of 0.5 W/sf (equivalent) of heated floor area or 500 W, whichever is bigger, may be installed in the dwelling unit.
b. Equipment listed in Table C403.3.2(4) or C403.3.2(5)
c. Equipment listed in Table C403.3.2(1) or C403.3.2(2)
d. **You cannot select more than one option from any category EXCEPT in category 5. Option 5.1 may be combined with options 5.2 through 5.6. See Table 406.3.**
e. 1.0 credit for each 1,200 kWh of electrical generation provided annually, up to 3 credits max. See the complete Table R406.2 for all requirements and option descriptions.
f. Use the single radiobutton in the upper right of the second column to deselect radiobuttons in that group.

Please print only pages 1 through 3 of this worksheet for submission to your building official.

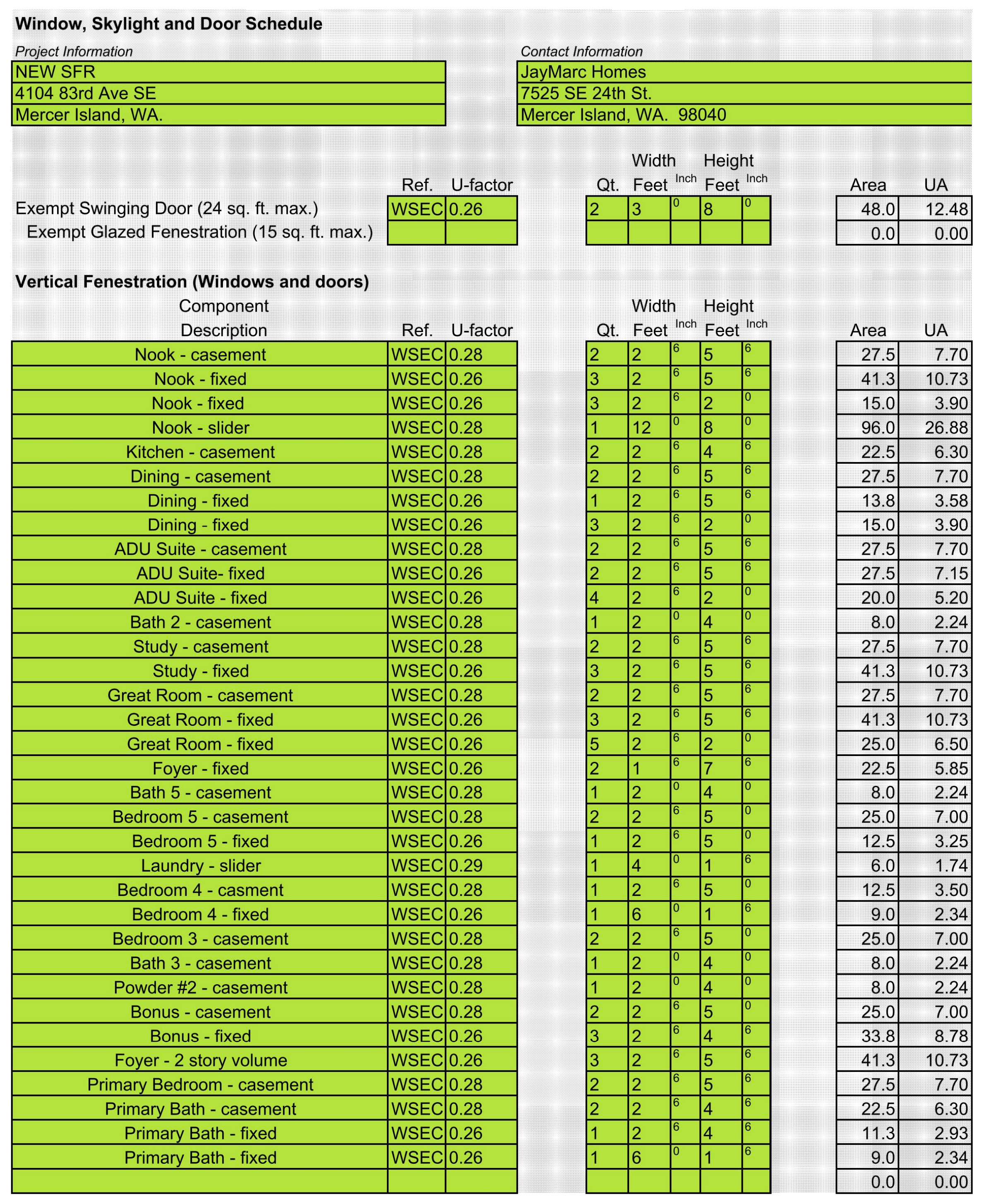

Window, Skylight and Door Schedule

Project Information	*Contact Information*
NEW SFR	JayMarc Homes
4104 83rd Ave SE	7525 SE 24th St.
Mercer Island, WA.	Mercer Island, WA. 98040

	Ref.	U-factor	Qt.	Width Feet	Inch	Height Feet	Inch	Area	UA
Exempt Swinging Door (24 sq. ft. max.)	WSEC	0.26	2	3	0	8	0	48.0	12.48
Exempt Glazed Fenestration (15 sq. ft. max.)								0.0	0.00

Vertical Fenestration (Windows and doors)

Component Description	Ref.	U-factor	Qt.	Width Feet	Inch	Height Feet	Inch	Area	UA
Nook - casement	WSEC	0.28	2	2	6	5	6	27.5	7.70
Nook - fixed	WSEC	0.26	3	2	6	5	6	41.3	10.73
Nook - fixed	WSEC	0.26	3	2	6	2	0	15.0	3.90
Nook - slider	WSEC	0.28	1	12	0	8	0	96.0	26.88
Kitchen - casement	WSEC	0.28	2	2	6	4	6	22.5	6.30
Dining - casement	WSEC	0.28	2	2	6	5	6	27.5	7.70
Dining - fixed	WSEC	0.26	1	2	6	5	6	13.8	3.58
Dining - fixed	WSEC	0.26	3	2	6	2	0	15.0	3.90
ADU Suite - casement	WSEC	0.28	2	2	6	5	6	27.5	7.70
ADU Suite- fixed	WSEC	0.26	2	2	6	5	6	27.5	7.15
ADU Suite - fixed	WSEC	0.26	4	2	6	2	0	20.0	5.20
Bath 2 - casement	WSEC	0.28	1	2	0	4	0	8.0	2.24
Study - casement	WSEC	0.28	2	2	6	5	6	27.5	7.70
Study - fixed	WSEC	0.26	3	2	6	5	6	41.3	10.73
Great Room - casement	WSEC	0.28	2	2	6	5	6	27.5	7.70
Great Room - fixed	WSEC	0.26	3	2	6	5	6	41.3	10.73
Great Room - fixed	WSEC	0.26	5	2	6	2	0	25.0	6.50
Foyer - fixed	WSEC	0.26	2	1	6	7	6	22.5	5.85
Bath 5 - casement	WSEC	0.28	1	2	0	4	0	8.0	2.24
Bedroom 5 - casement	WSEC	0.28	2	2	6	5	0	25.0	7.00
Bedroom 5 - fixed	WSEC	0.26	1	2	6	5	0	12.5	3.25
Laundry - slider	WSEC	0.29	1	4	0	1	6	6.0	1.74
Bedroom 4 - casment	WSEC	0.28	1	2	6	5	0	12.5	3.50
Bedroom 4 - fixed	WSEC	0.26	1	6	0	1	6	9.0	2.34
Bedroom 3 - casement	WSEC	0.28	2	2	6	5	0	25.0	7.00
Bath 3 - casement	WSEC	0.28	1	2	0	4	0	8.0	2.24
Powder #2 - casement	WSEC	0.28	1	2	0	4	0	8.0	2.24
Bonus - casement	WSEC	0.28	2	2	6	5	0	25.0	7.00
Bonus - fixed	WSEC	0.26	3	2	6	4	6	33.8	8.78
Foyer - 2 story volume	WSEC	0.26	3	2	6	5	6	41.3	10.73
Primary Bedroom - casement	WSEC	0.28	2	2	6	5	6	27.5	7.70
Primary Bath - casement	WSEC	0.28	2	2	6	4	6	22.5	6.30
Primary Bath - fixed	WSEC	0.26	1	2	6	4	6	11.3	2.93
Primary Bath - fixed	WSEC	0.26	1	6	0	1	6	9.0	2.34
								0.0	0.00

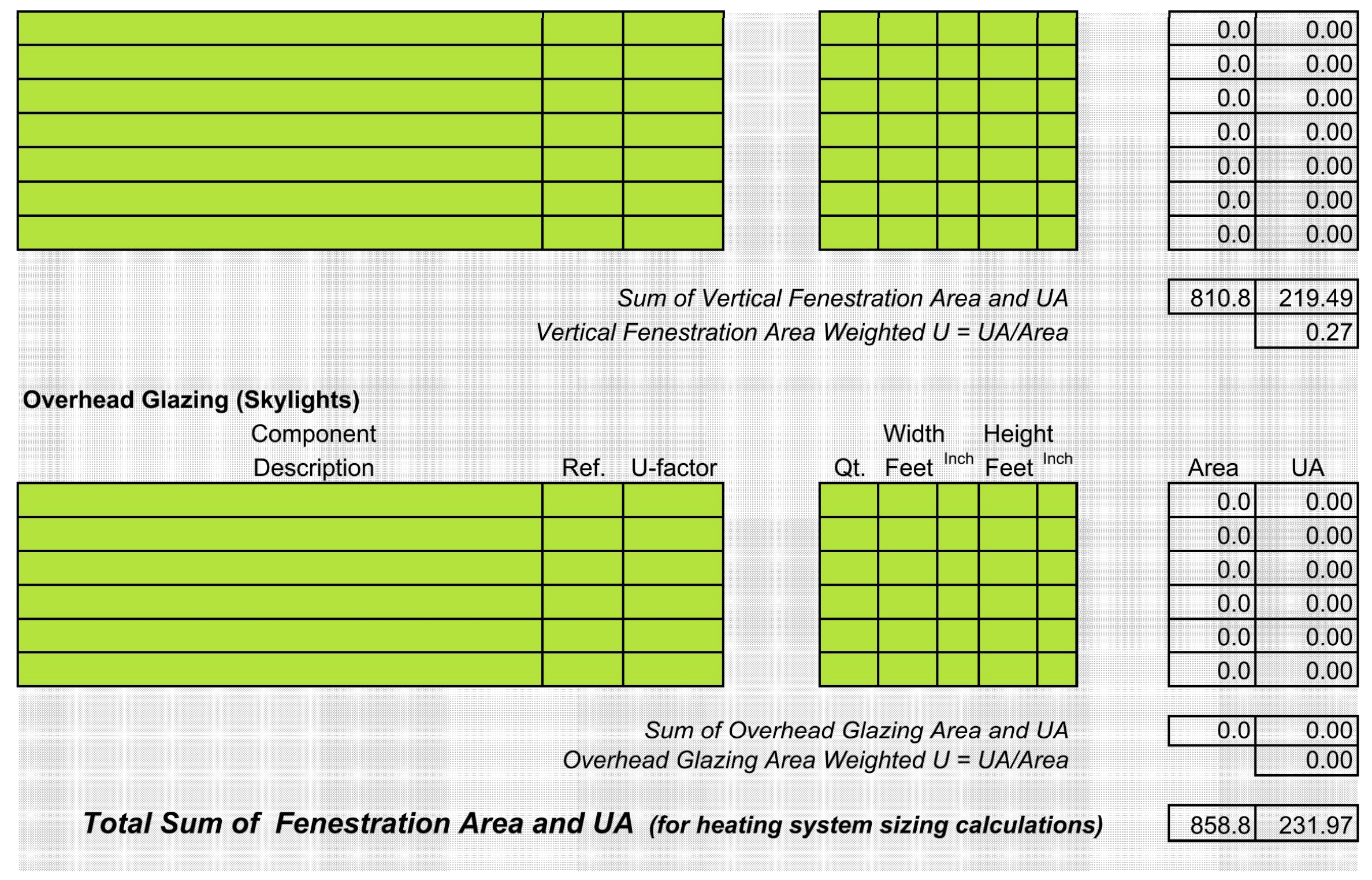

Component Description	Ref.	U-factor	Qt.	Width Feet	Inch	Height Feet	Inch	Area	UA
								0.0	0.00
								0.0	0.00
								0.0	0.00
								0.0	0.00
								0.0	0.00
								0.0	0.00
								0.0	0.00

Sum of Vertical Fenestration Area and UA 810.8 219.49
Vertical Fenestration Area Weighted U = UA/Area 0.27

Overhead Glazing (Skylights)

Component Description	Ref.	U-factor	Qt.	Width Feet	Inch	Height Feet	Inch	Area	UA
								0.0	0.00
								0.0	0.00
								0.0	0.00
								0.0	0.00
								0.0	0.00
								0.0	0.00

Sum of Overhead Glazing Area and UA 0.0 0.00
Overhead Glazing Area Weighted U = UA/Area 0.00

Total Sum of Fenestration Area and UA ***(for heating system sizing calculations)*** 858.8 231.97

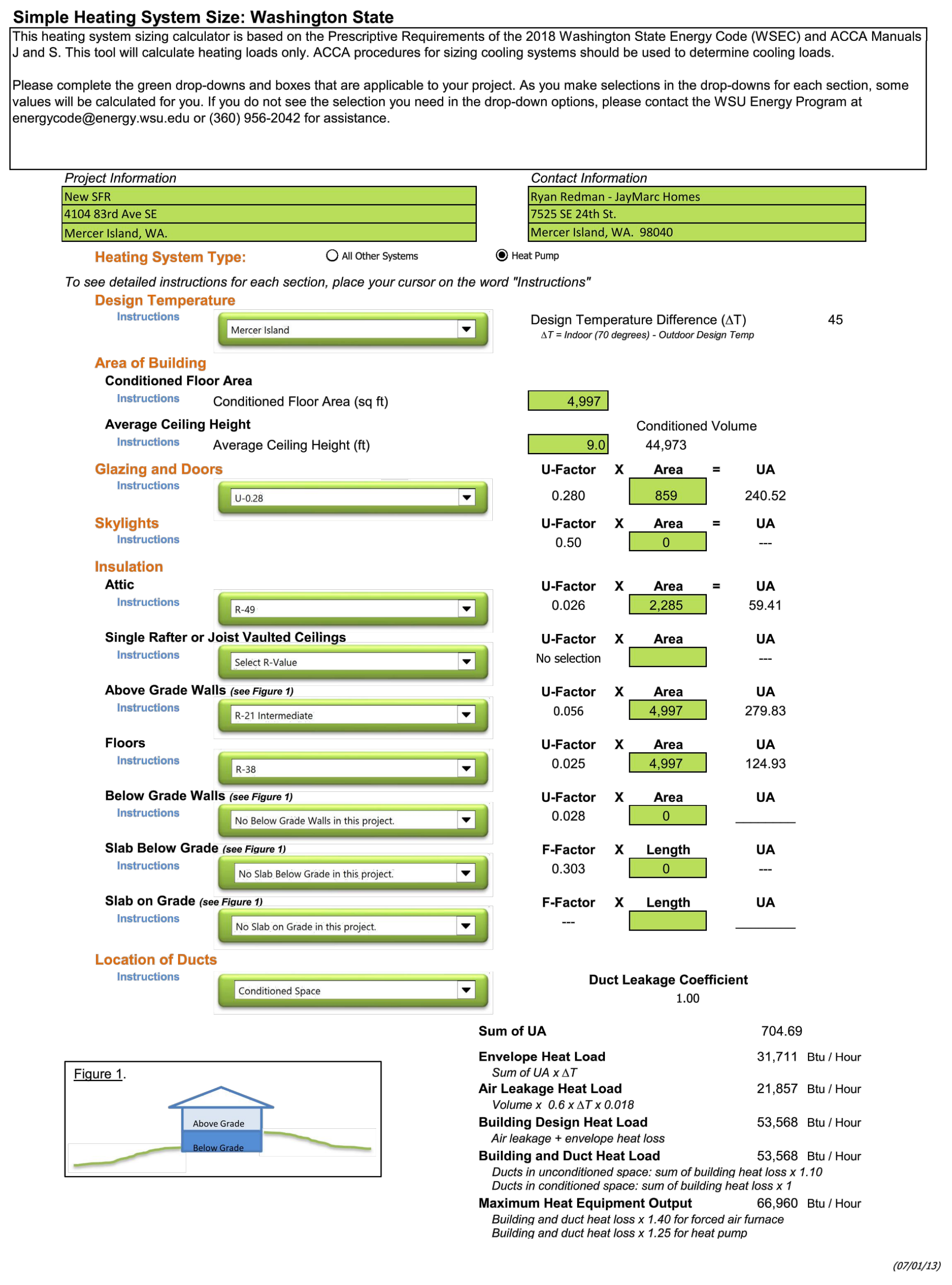

Simple Heating System Size: Washington State

This heating system sizing calculator is based on the Prescriptive Requirements of the 2018 Washington State Energy Code (WSEC) and ACCA Manuals J and S. This tool will calculate heating loads only. ACCA procedures for sizing cooling systems should be used to determine cooling loads.

Please complete the green drop-downs and boxes that are applicable to your project. As you make selections in the drop-downs for each section, some values will be calculated for you. If you do not see the selection you need in the drop-down options, please contact the WSU Energy Program at energycode@energy.wsu.edu or (360) 956-2042 for assistance.

Project Information	*Contact Information*
New SFR	Ryan Redman - JayMarc Homes
4104 83rd Ave SE	7525 SE 24th St.
Mercer Island, WA.	Mercer Island, WA. 98040

Heating System Type: ○ All Other Systems ● Heat Pump

To see detailed instructions for each section, place your cursor on the word "Instructions"

Design Temperature
Instructions
Mercer Island
Design Temperature Difference (ΔT) 45
ΔT = Indoor (70 degrees) - Outdoor Design Temp

Area of Building
Conditioned Floor Area
Instructions
Conditioned Floor Area (sq ft) 4,997
Average Ceiling Height
Instructions
Average Ceiling Height (ft) 9.0
Conditioned Volume 44,973

	Selection	U-Factor	X	Area	=	UA
Glazing and Doors	U-0.28	0.280	X	859	=	240.52
Skylights		0.50	X	0	=	---
Insulation – Attic	R-49	0.026	X	2,285	=	59.41
Single Rafter or Joist Vaulted Ceilings	Select R-Value	No selection	X			---
Above Grade Walls *(see Figure 1)*	R-21 Intermediate	0.056	X	4,997		279.83
Floors	R-38	0.025	X	4,997		124.93
Below Grade Walls *(see Figure 1)*	No Below Grade Walls in this project.	0.028	X	0		

	Selection	F-Factor	X	Length	UA
Slab Below Grade *(see Figure 1)*	No Slab Below Grade in this project.	0.303	X	0	---
Slab on Grade *(see Figure 1)*	No Slab on Grade in this project.	---	X		

Location of Ducts
Instructions
Conditioned Space
Duct Leakage Coefficient 1.00

Figure 1.

Sum of UA	704.69	
Envelope Heat Load *Sum of UA x ΔT*	31,711	Btu / Hour
Air Leakage Heat Load *Volume x 0.6 x ΔT x 0.018*	21,857	Btu / Hour
Building Design Heat Load *Air leakage + envelope heat loss*	53,568	Btu / Hour
Building and Duct Heat Load *Ducts in unconditioned space: sum of building heat loss x 1.10* *Ducts in conditioned space: sum of building heat loss x 1*	53,568	Btu / Hour
Maximum Heat Equipment Output *Building and duct heat loss x 1.40 for forced air furnace* *Building and duct heat loss x 1.25 for heat pump*	66,960	Btu / Hour

(07/01/13)

PROVIDE HEATING AND COOLING DESIGN LOADS CALCULATION FOR SIZING THE HVAC SYSTEM PER WSEC-R403.7

PER WSEC R402.4, THE BUILDING THERMAL ENVELOPE SHALL BE CONSTRUCTED TO LIMIT AIR LEAKAGE. THE RESULTS OF THE TEST SHALL BE SIGNED BY THE PARTY CONDUCTING THE TEST AND PROVIDED TO THE CODE OFFICIAL (R402.4.1.2).

PER WSEC R403.3.3, DUCTS, AIR HANDLERS, AND FILTER BOXES SHALL BE SEALED AND BE LEAK TESTED.

PER WSEC R404.1, A MINIMUM OF 90 PERCENT OF THE LAMPS IN PERMANENTLY INSTALLED LIGHTING FIXURES SHALL BE HIGH EFFICIENCY LAMPS.

PROVIDE CERTIFICATE REPORT PER R405.4.2 IN 2018 WSEC.

JAYMARC
HOMES
7525 SE 24th St., 487
Mercer Island, WA
98040
425.266.9100

△ Issue Description	Issue Date	By
△ .	.	.
. .	.	.
. .	.	.
. .	.	.

4104 83rd Ave SE
Mercer Island, WA.
Job Number:
MIS075

plan name: --
marketing name: XXXXXX
plan number: MIS075
mark sys. number: --

Conditions not specifically represented graphically or in writing or which conflict with the current International Residential Code (IRC.) or those of the local municipality then the current standards and requirements of each respectively shall govern.

The drawings in this set are instruments of service and shall remain the property of JayMarc Homes, LLC.

Submittal Date: 02.21.24
Sheet Title/Description: .
Design Firm: JAYMARC HOMES
Drawn by: R.R.
Checked by: R.R./ S.K.
Primary Scale: .

Sheet Title/Description
EN1
of: .

Vertical wall Installation

Install Typar® HouseWrap over an approved exterior sheathing after the framing is complete and before the windows and doors have been installed. Plastic capped fasteners should be used and spaced at 32” OC (vertically and horizontally) when being applied over 7/16” OSB or 15/32” plywood. When installing over metal framing use screws with washers. If the windows and doors have already been installed, trim the Typar WRB close to the window frame and flash according to the Typar Flashing instructions.

STEP 1

Start at the bottom of one end of the wall with the printed side facing out. When starting at a corner, overlap by a minimum of 12”.

Place the housewrap roll horizontally and roll out the first course evenly, covering rough window and door openings. A minimum of a 1” (25.4 mm) overlap on the sill plate is required; however, for maximum protection, a 2-4” (51-102 mm) overlap on the sill plate is recommended.

Pull the Typar snug and avoid wrinkles and creases. Ensure that the product is level.

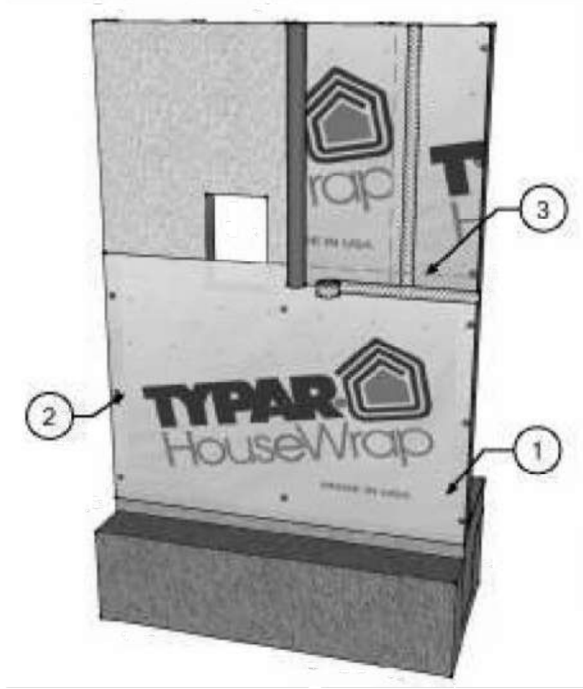

STEP 2

Fasten the Typar to the stud using plastic capped nails or plastic capped staples at 32” O.C. both horizontally and vertically.

32" SPACING BOTH HORIZONTAL AND VERTICAL

STEP 3

The upper layer of Typar housewrap should overlap the bottom layer by a minimum of 6” (152 mm) vertically and horizontally. Ensure proper shingling throughout the installation to properly shed water. Once the structure is completely covered, tape all seams and penetrations using Typar® construction tape. (Please refer to the Typar® flashing instructions for more detailed instruction on penetrations and window flashing installation).

STEP 4

After the installation complete and before the exterior cladding is installed, inspect the Typar® for tears. Repair the issues with Typar Construction tape or Typar Flashing.

Window and Door Preparation

Preparing for Window Installation

STEP 1

After wrapping the structure and covering all rough openings. Cut a horizontal line across the top of the window opening. The cut should not extend past the rough opening.

STEP 2

Start at the top center and make a vertical cut running two-thirds of the way down the opening.

STEP3

From that stopping point, cut diagonally to both lower left and right corners of the opening.

STEP 4

Pull each of the flaps tightly inside the rough opening and attach them to the frame with nails, staples, or tape.

STEP 5

At the window header, make a 6” diagonal cut at a 45 degree angle on both corners. Fold the material up exposing the sheathing. Now install the window or door according to the manufacturer instructions. The final step is to flash all seams and flanges securely (refer to Typar® Flashing instructions). Typar® flashing should also be installed in accordance with window manufacturer instructions and according to the ASTM 2112 standard.

1)

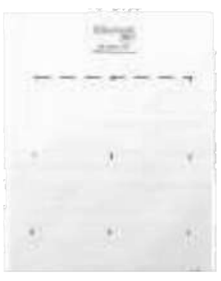

2)

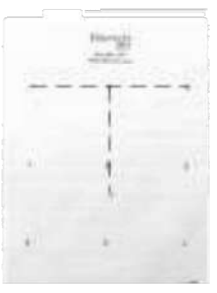

3)

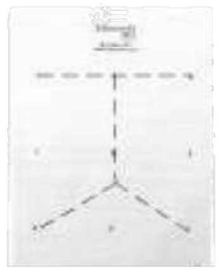

4)

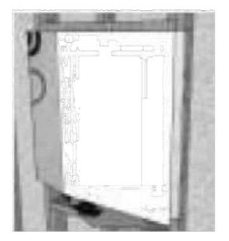

5)

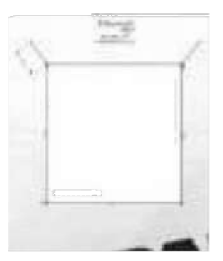

Typical Window Flashing

STEP 1

Install the window sill pan according to the manufacturer’s instructions. Alternatively, you can create a sill pan using Typar Flashing Flex. Cut a piece that is 12” longer than the length of the rough opening window sill.

Carefully pull off the release liner. Center the Flashing in the center of the rough opening and work you way toward the corners and then up the sides. Note: the flex flashing should overlap to the outside of the wall by 2-3”. Only stretch the flashing in the corners.

Alternatively to above, you can create a sill pan by installing TYPAR Straight Flashing along the bottom sill and installing TYPAR Flashing Flex on the corners only.

If needed, secure the fanned edges of the TYPAR Flashing Flex with a plastic capped nail/ plastic capped staple.

STEP 2

Apply a continuous bead of sealant to the back of the window or on the wall. Do not apply the sealant across the bottom of the sill or on the bottom of the window. This area is left open to allow for proper drainage.

Install the window according to the manufacturer’s installation instructions.

STEP 3

Cut two pieces of Typar Flashing long enough to extend 1” above the window head flange and 1” below the window sill flange. Carefully peel off the release liner and apply the flashing on both sides of the window. Make sure to cover the entire window flange, press firmly either by hand or using a J-roller. Ensure there are no wrinkles or bubbles.

Cut a piece of Typar Flashing for the head flashing. Ensure that the piece is long enough to extend by 1” on both sides of the jamb flashing. Remove the release liner and carefully install the flashing. Cover the window flange and press firmly by hand or using a J-roller.

STEP 4

Release the upper flap of the WRB that you cut earlier. Tape the 45 degree cuts using Typar Construction Tape or Typar Flashing. DO NOT tape the WRB along the top of the window flange.

1)

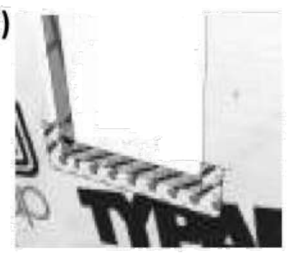

2)

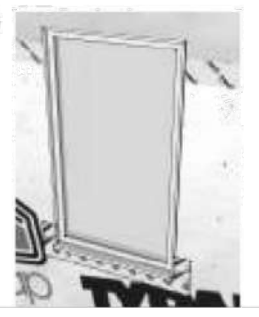

3)

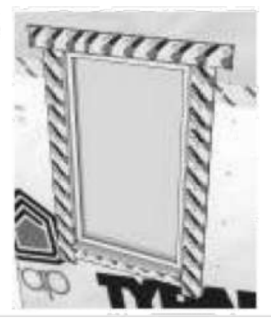

4)

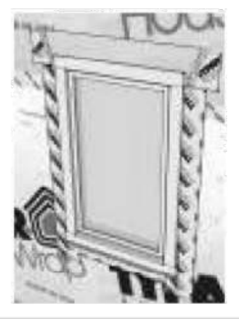

Flashing Penetrations

Penetrations such as exhaust fans, exterior electrical outlets, dryer vents, exterior lights, and gas outlets are a common entrance for bulk water into the wall cavity. Using Typar flashing will ensure proper water hold out and maintain the integrity of the structure.

The method is similar to the flashing a window. Start by flashing the bottom of the penetration. Ensure to shingle the upper tape over the bottom tape.

Some penetrations have flanges, such as dryer vents. These penetrations should be flashed according to the details below.

STEP 1

Install the vent according to the manufacturer’s recommendations. Trim the housewrap as close as possible around the perimeter of the vent.

STEP 2

Flash the vent using the same method as windows. Starting at the bottom flange; cut the flashing so that it extends past the flanges by 1” on both sides. Now apply the flashing to the sides of the vent. Remember to extend the flashing 1” on both top and bottom. Make sure to smooth out wrinkles and air bubbles. The use of a J-roller is optional.

STEP 3

The Final step is to install the flashing across the top. Extend the flashing out at least 1” on both sides.

Note: This type of installation is suitable for several different penetrations. Always use the shingling method and ensure a tight seal around the flange/penetration.

1)

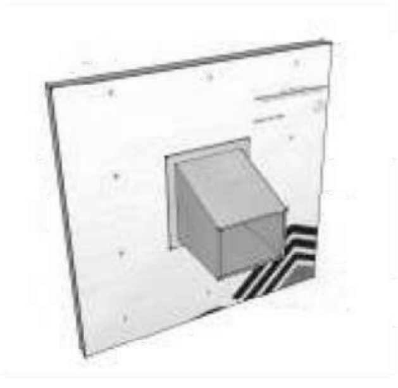

2)

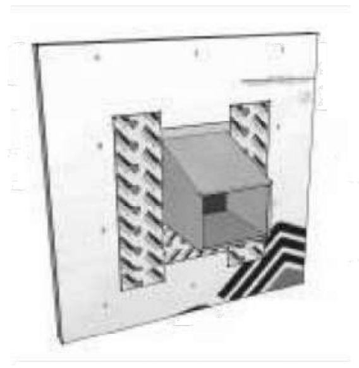

3)

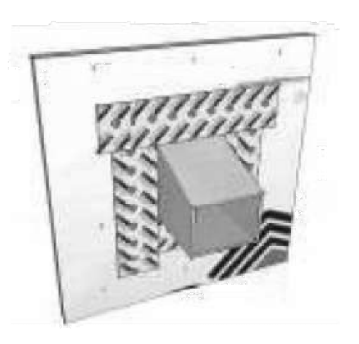

Typar® HouseWrap is part of a complete Weather Protection System, which also includes Typar® Metro Wrap, Typar® Flashings and Construction tape

For more information, visit www.Typar.com

MADE IN USA. ICC #ESR-1404 • CCMC #12884-R • CCMC #12892-R
Please visit typar.com for installation instructions and warranty information

---

JAYMARC
HOMES

7525 SE 24th St., 487
Mercer Island, WA
98040
425.266.9100

△ Issue Issue Date By Description
△. . .
.
. . .
.
. . .
.
. . .
.

Job Number:

plan name: --
marketing name:
plan number: --
mark sys. number:--

Conditions not specifically represented graphically or in writing or which conflict with the current International Residential Code (IRC.) or those of the local municipality then the current standards and requirements of each respectively shall govern.

The drawings in this set are instruments of service and shall remain the property of JayMarc Homes, LLC.

.
Submittal Date

.
Sheet Title/Description

.
Design Firm

.
Drawn by:

.
Checked by:

.
Primary Scale

Sheet Title/Description

D1
of: .

NE 1/4 OF THE NE 1/4 OF SECTION 13, TOWNSHIP 24 NORTH., RANGE 4 EAST, W.M., KING COUNTY, WA.

Note: tree protection fencing is to be installed at the specified LOD's prior to beginning any work aon the site including clearing and grading and is to remain in place throughout development.

Arborist will provide guidance at to how to best remove the portion of the existing driveway located within the LOD of trees 24 through 27.

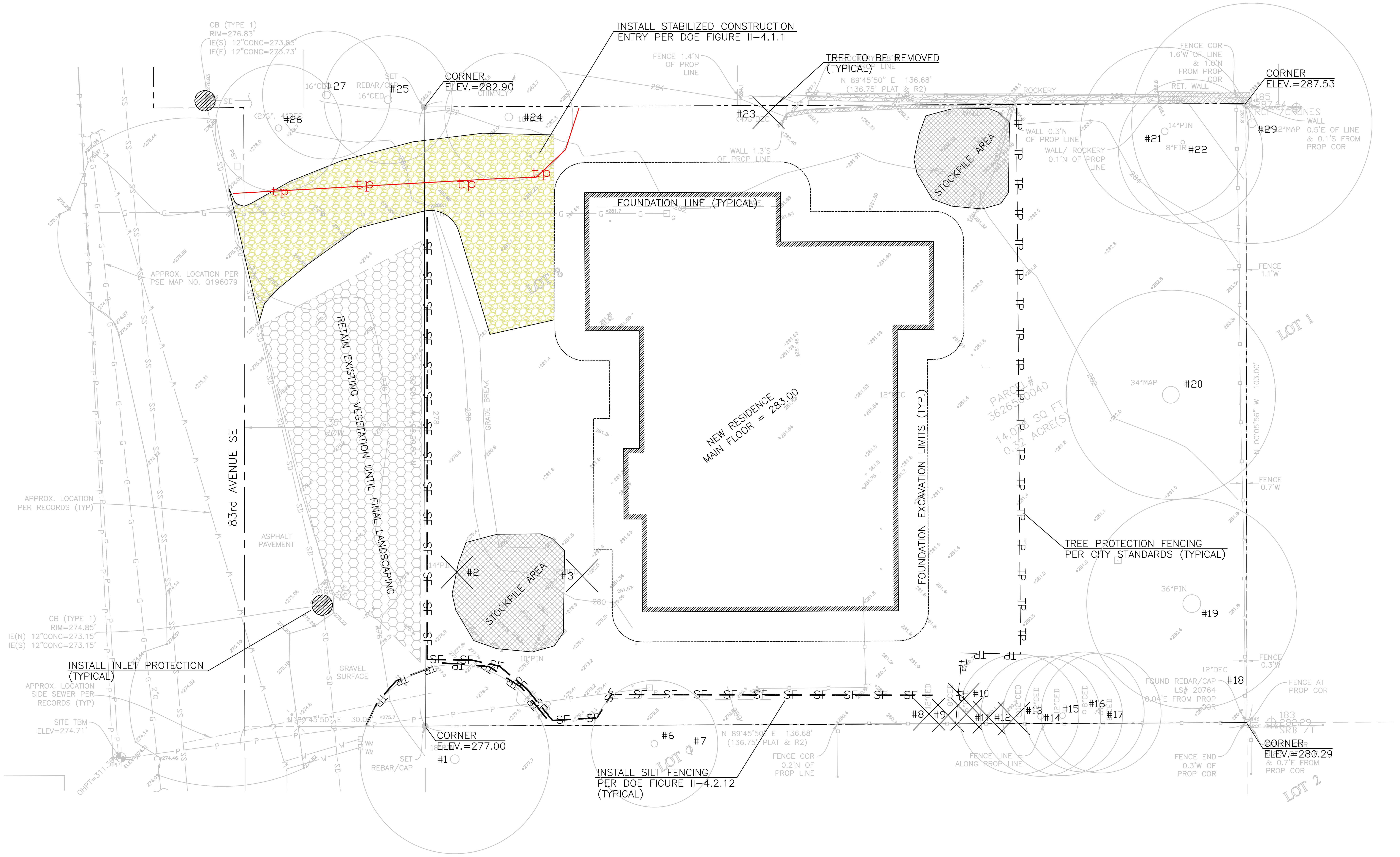
INSTALL STABILIZED CONSTRUCTION ENTRY PER DOE FIGURE II–4.1.1
TREE TO BE REMOVED (TYPICAL)
CORNER ELEV.=282.90
CORNER ELEV.=287.53
CORNER ELEV.=277.00
CORNER ELEV.=280.29
FOUNDATION LINE (TYPICAL)
FOUNDATION EXCAVATION LIMITS (TYP.)
NEW RESIDENCE MAIN FLOOR = 283.00
STOCKPILE AREA
STOCKPILE AREA
RETAIN EXISTING VEGETATION UNTIL FINAL LANDSCAPING
83rd AVENUE SE
TREE PROTECTION FENCING PER CITY STANDARDS (TYPICAL)
INSTALL SILT FENCING PER DOE FIGURE II–4.2.12 (TYPICAL)
INSTALL INLET PROTECTION (TYPICAL)
CB (TYPE 1) RIM=276.83' IE(S) 12"CONC=273.83' IE(E) 12"CONC=273.73'
CB (TYPE 1) RIM=274.85' IE(N) 12"CONC=273.15' IE(S) 12"CONC=273.15'
APPROX. LOCATION PER PSE MAP NO. Q196079
APPROX. LOCATION PER RECORDS (TYP)
APPROX. LOCATION SIDE SEWER PER RECORDS (TYP)
SITE TBM ELEV=274.71'
ASPHALT PAVEMENT
GRAVEL SURFACE
LOT 1
LOT 2
N 89°45'50" E 136.68' (136.75' PLAT & R2)
#1 #2 #3 #6 #7 #8 #9 #10 #11 #12 #13 #14 #15 #16 #17 #18 #19 #20 #21 #22 #23 #24 #25 #26 #27 #29
tp
SF
TP

LEGEND

- ASPHALT SURFACE
- BRICK SURFACE
- BUILDING
- CENTERLINE ROW
- CLEANOUT
- CULVERT PIPE
- CONCRETE SURFACE
- RETAINING WALL
- DECK
- FENCE LINE (CHAIN LINK)
- FENCE LINE (WOOD)
- GAS METER
- GRAVEL SURFACE
- HEDGE FOLIAGE LINE
- INLET (TYPE 1)
- MAILBOX (RESIDENTIAL)
- EXISTING SPOT ELEVATIONS
- MONUMENT IN CASE (FOUND)
- POWER METER
- POWER (OVERHEAD)
- POWER POLE
- REBAR AS NOTED (FOUND)
- REBAR & CAP (SET)
- ROCKERY
- SEWER LINE
- SEWER MANHOLE
- STORM DRAIN LINE
- TELEPHONE (OVERHEAD)
- TELEPHONE SENTRY
- WATER METER
- POWER TRANSFORMER POLE
- TREE (AS NOTED)

ONSITE			TREE TABLE				
ID	Species	Dbh	Dripline	Classification	Limit of Development LOD	RETAIN	REMOVE
2	Blue spruce	12	16	Significant	10		yes
3	Flowering cherry	14	24	Significant	14		yes
4	Laceleaf Maple	3	5	Small Tree	N/A		yes
5	Mugo Pine	5	8	Small Tree	N/A		yes
8	Leyland cypress	12	18	Significant	10		yes
9	Leyland cypress	5	8	Small Tree	N/A		yes
10	Leyland cypress	4	6	Small Tree	N/A		yes
11	Leyland cypress	4	6	Small Tree	N/A		yes
12	Leyland cypress	3	6	Small Tree	N/A		yes
13	Leyland cypress	10	12	Significant	10	yes	
14	Leyland cypress	10	14	Significant	10	yes	
15	Leyland cypress	10	14	Significant	10	yes	
16	Leyland cypress	6	8	Small Tree	10	yes	
17	Leyland cypress	6	8	Small Tree	10	yes	
18	Hawthorn	10	22	Exeptional	12	yes	
19	Douglas-fir	40	42	Exceptional	116	yes	
20	Big leaf maple	46.0	79	Exceptional	16	yes	
21	Douglas-fir	8	16	Small Tree	10	yes	
22	Douglas-fir	14	30	Significant	16	yes	
23	Goldenchain tree	18		Dead	N/A		yes
24	Vine Maple	10	18	Exceptional	10	yes	
27	Evergreen Magnolia	6	10	Small Tree	14		yes
28	Hawthorn	10	18	Exceptional	18	yes	

	OFFSITE						
1	Ponderosa Pine	18	28	Significant	15		
6	Saucer magnolia	7	16	Small Tree	10		
25	Leyland Cypress	10	18	Significant	10		
26	Leyland Cypress	10	18	Significant	10		

TABLE OF CONTENT

SHEET #	DESCRIPTION
1	TOPOGRAPHIC SURVEY
2	WETLANUTILITY & TREE PLAN
3	UTILITY DETAILS
4	AMENDED SOILS PLAN

GRAPHIC SCALE
0 5 10 20
1 inch = 10 feet

PERMIT #: 2402–144

REV. NO.	DATE	DESCRIPTION
1	07/26/24	REVISED HOUSE LAYOUT

DARRELL L. OFFE JR.
27460
07/26/2024

OFFE ENGINEERS
13932 SOUTHEAST 159TH PLACE
RENTON, WASHINGTON 98058
PHONE: 425-260-3412
CONTACT: DARRELL OFFE, P.E.

DESIGNED BY DLO
DRAWN BY SL$
CHECKED BY DLO

PROJECT
4104 83rd Avenue SE

CLIENT
JayMarc Diamond, LLC

SHEET CONTENT
Temp. Erosion & Sedmientation Control Plan

DATE 07/26/2024
JOB NO.
DWG NO.

SHEET
1 OF 4

NE 1/4 OF THE NE 1/4 OF SECTION 13, TOWNSHIP 24 NORTH., RANGE 4 EAST, W.M., KING COUNTY, WA.

EXISTING UTILITY LOCATIONS SHOWN HEREON ARE APPROXIMATE ONLY. IT SHALL BE THE CONTRACTOR'S RESPONSIBILITY TO DETERMINE THE EXACT VERTICAL AND HORIZONTAL LOCATION OF ALL EXISTING UNDERGROUND UTILIITES PRIOR TO COMMENCING CONSTRUCTION. NO REPRESENTATION IS MADE THAT ALL EXISTING UTILITIES ARE SHOWN HEREON. THE ENGINEER ASSUMES NO RESPONSIBILITY FOR UTILITIES NOT SHOWN OR UTILITIES NOT SHOWN IN THEIR PROPER LOCATION.

CALL BEFORE YOU DIG: 811

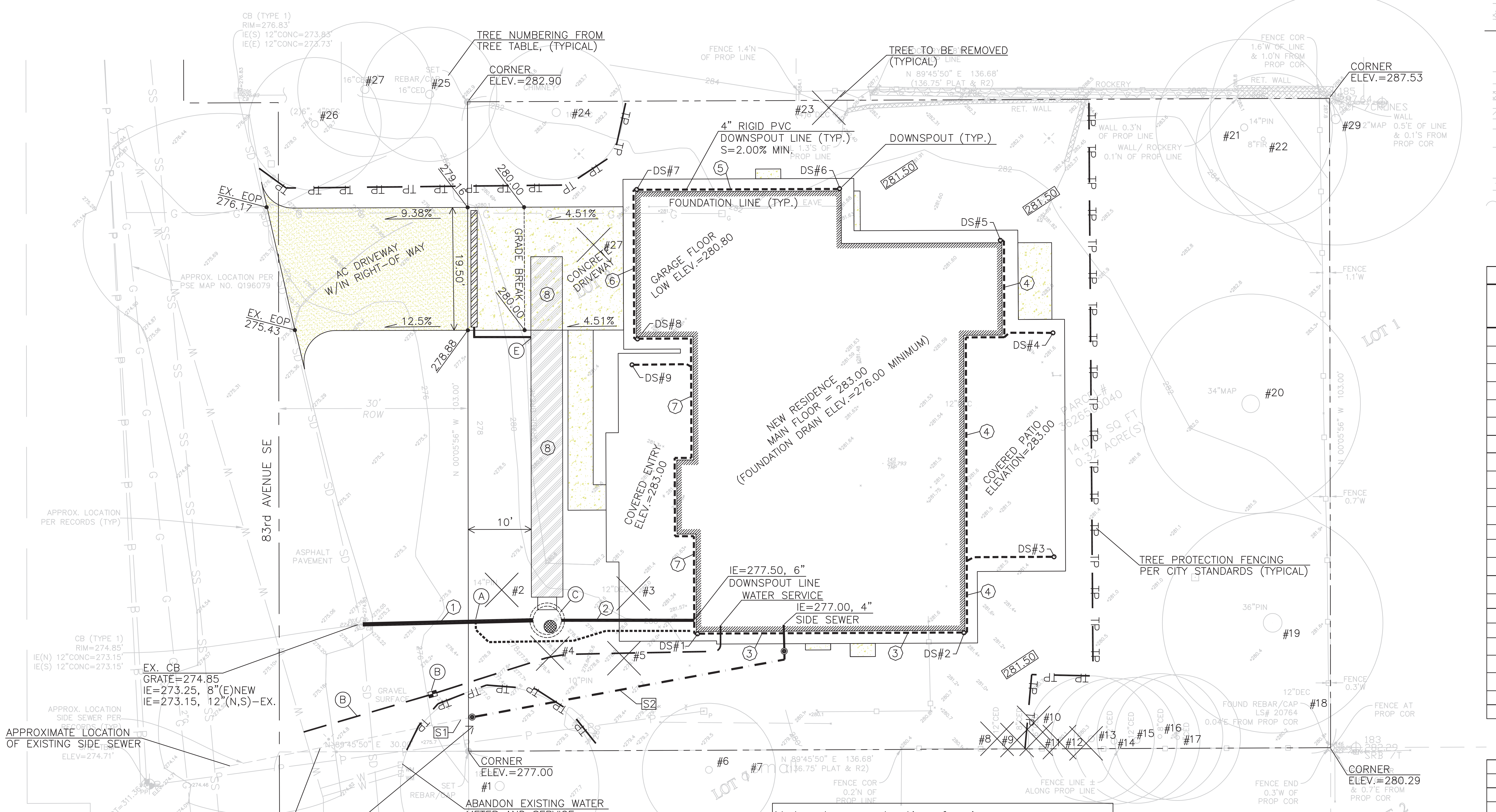
CB (TYPE 1)
RIM=276.83'
IE(S) 12"CONC=273.83'
IE(E) 12"CONC=273.73'
TREE NUMBERING FROM TREE TABLE, (TYPICAL)
CORNER ELEV.=282.90
#27
#25
#26
#24
#23
TREE TO BE REMOVED (TYPICAL)
N 89°45'50" E 136.68' (136.75' PLAT & R2)
ROCKERY
RET. WALL
CORNER ELEV.=287.53
#29
#21
#22
4" RIGID PVC DOWNSPOUT LINE (TYP.) S=2.00% MIN.
DOWNSPOUT (TYP.)
DS#7
DS#6
DS#5
DS#4
DS#3
DS#2
DS#1
DS#8
DS#9
FOUNDATION LINE (TYP.)
281.50
EX. EOP 276.17
EX. EOP 275.43
9.38%
12.5%
4.51%
19.50'
279.16
280.00
278.88
AC DRIVEWAY W/IN RIGHT-OF WAY
GRADE BREAK
CONCRETE DRIVEWAY
GARAGE FLOOR LOW ELEV.=280.80
NEW RESIDENCE MAIN FLOOR = 283.00 (FOUNDATION DRAIN ELEV.=276.00 MINIMUM)
COVERED PATIO ELEVATION=283.00
COVERED ENTRY ELEV.=283.00
APPROX. LOCATION PER PSE MAP NO. Q196079
30' ROW
83rd AVENUE SE
APPROX. LOCATION PER RECORDS (TYP)
ASPHALT PAVEMENT
10'
#20
#19
#18
LOT 1
LOT 2
TREE PROTECTION FENCING PER CITY STANDARDS (TYPICAL)
IE=277.50, 6" DOWNSPOUT LINE
WATER SERVICE
IE=277.00, 4" SIDE SEWER
#2
#3
#4
#5
#1
#6
#7
#8
#9
#10
#11
#12
#13
#14
#15
#16
#17
CB (TYPE 1)
RIM=274.85'
IE(N) 12"CONC=273.15'
IE(S) 12"CONC=273.15'
EX. CB
GRATE=274.85
IE=273.25, 8"(E)NEW
IE=273.15, 12"(N,S)–EX.
APPROXIMATE LOCATION OF EXISTING SIDE SEWER
GRAVEL SURFACE
S1
S2
CORNER ELEV.=277.00
CORNER ELEV.=280.29
ABANDON EXISTING WATER METER AND SERVICE FOR 4104 83rd AVENUE SE (ONLY)

NOTE: A TV INSPECTION OF THE EXISTING SIDE SEWER TO THE CITY SEWER MAIN IN WEST MERCER WAY IS REQUIRED PRIOR TO ANY WORK RELATED TO THE SIDE SEWER. IF THE RESULT OF THE TV INSPECTION IS NOT IN SATISFACTORY CONDITION, AS DETERMINED BY THE CITY OF MERCER ISLAND INSPECTOR, THE REPLACEMENT OF THE EXISTING SIDE SEWER IS REQUIRED TO THE SEWER MAIN.

NOTE: When identifying and connecting to the SS, care shall be taken to protect Tree #1. This may include tunneling or relocation of the sewer line. It shall be monitored by the arborist.

SIDE SEWER NOTES

- S1 APPROXIMATE LOCATION OF EXISTING SANITARY SIDE SEWER.
- S2 INSTALL 55LF., 4" PVC SIDE SEWER @ MIN. 2% SLOPE W/SANITARY SEWER CLEANOUTS

Note: tree protection fencing is to be installed at the specified LOD's prioir to beginning any work on the site including clearing and grading and is to remain in place throughout developement.

If encroachment into the LOD is authorized the fencing is only to be removed at the time that the work within the LOD is to be done under the observation of the arborist.

STORM PIPE TABLE

①	27LF., 8" D.I. @ S=0.50%
②	21LF., 6" PVC SDR–35 @ S=4.76%
③	42LF., 4" PVC SDR–35 @ S=2.00%
④	69LF., 4" PVC SDR–35 @ S=2.00%
⑤	32LF., 4" PVC SDR–35 @ S=4.75%
⑥	24LF., 4" PVC SDR–35 @ S=2.00%
⑦	62LF., 4" PVC SDR–35 @ S=2.00%
⑧	54LF., 60" CMP @S=0.50%

DOWNSPOUT TABLE

DS#1	GROUND=281.50 DOWNSPOUT LINE=278.45, 4"
DS#2	GROUND=281.50 DOWNSPOUT LINE=279.30, 4"
DS#3	CONCRETE=283.00 DOWNSPOUT LINE=281.00, 4"
DS#4	CONCRETE=283.00 DOWNSPOUT LINE=281.00, 4"
DS#5	GROUND=281.50 DOWNSPOUT LINE=280.67, 4"
DS#6	GROUND=281.50 DOWNSPOUT LINE=280.67, 4"
DS#7	GROUND=280.50 DOWNSPOUT LINE=279.15, 4"
DS#8	GROUND=280.50 DOWNSPOUT LINE=278.67, 4"
DS#9	CONCRETE=283.00 DOWNSPOUT LINE=281.00, 4"

NOTE: CONNECT 4" FOUNDATION DRAIN AT LOCATION SHOWN ON PLANS – ONLY!

NOTE: 4" PERFORATED FOUNDATION DRAIN REQUIRED BUT NOT SHOWN ON PLAN, CONNECT WHERE SHOWN ON PLAN, WYE INTO DETENTION TANK OUTFALL

NOTE: THE LAWN AND LANDSCAPE AREAS ARE REQUIRED TO PROVIDE POST–CONSTRUCTION SOIL QUALITY AND DEPTH IN ACCORDANCE WITH BMP T5.13. THE PROJECT CIVIL ENGINEER MUST PROVIDE A LETTER OF CERTIFICATION TO ENSURE THAT THE LAWN AND LANDSCAPE AREAS ARE MEETING THE POST–CONSTRUCTION SOIL QUALITY AND DEPTH REQUIREMENTS SPECIFIED ON THE APPROVED PLAN SET PRIOR TO FINAL INSPECTION OF THE PROJECT.

NOTES:

Ⓐ 4" FOUNDATION DRAIN CONNECTION
IE=273.60, 8"x4" WYE

Ⓑ INSTALL 1–1/2" METER AND 2" SERVICE LINE
PER CITY OF MERCER ISLAND STANDARD PLAN W–14.

NOTE: CONTRACTOR TO COORDINATE FINAL LOCATION OF NEW METER WITH CITY OF MERCER ISLAND INSPECTOR AT TIME OF CONSTRUCTION

Ⓒ CB#1, CONTROL STRUCTURE, TYPE II–54"ø
((SEE DETAIL ON SHEET 3 OF 4))
W/SOLID LOCKING LID
RIM=280.30
OVERFLOW=278.68, 8"(TOP OF TEE)
IE=276.50, 6"(E)–DOWNSPOUT LINE
IE=273.40, 36"(N), 8"(W)
ELEV.=271.40, 8"(BOTTOM OF TEE)
INSIDE BOTTOM=269.40

Ⓓ 20' SLOT DRAIN
GRATE ELEV.=VARIES (MIN.=278.85)
IE=277.10, 4"(E)

Ⓔ 4" WATER TIGHT CONNECTION
IE=275.64, 4"

STORM PIPE PVC SHALL BE SDR–35 PVC AT SLOPE=2.00% MINIMUM (TYPICAL) UNLESS OTHERWISE NOTED

IMPERVIOUS SURFACES:
ROOF AREA (UNDER EAVES) = 4,687 SQ. FEET
UNCOVERED DRIVEWAY AREA = 1,069 SQ. FEET
UNCOVERED PAVER WALKWAY = 122 SQ. FEET
UNCOVERED CONCRETE PADS = 89 SQ. FEET
TOTAL IMPERVIOUS AREAS = 5,967 SQ. FEET

LEGEND

- ASPHALT SURFACE
- BRICK SURFACE
- BUILDING
- CENTERLINE ROW
- CO○ CLEANOUT
- CULVERT PIPE
- CONCRETE SURFACE
- RETAINING WALL
- DECK
- FENCE LINE (CHAIN LINK)
- FENCE LINE (WOOD)
- G☐ GAS METER
- GRAVEL SURFACE
- HEDGE FOLIAGE LINE
- INLET (TYPE 1)
- MB MAILBOX (RESIDENTIAL)
- EXISTING SPOT ELEVATIONS
- MONUMENT IN CASE (FOUND)
- P☐ POWER METER
- POWER (OVERHEAD)
- PP○ POWER POLE
- ○ REBAR AS NOTED (FOUND)
- ● REBAR & CAP (SET)
- ROCKERY
- SEWER LINE
- ○ SEWER MANHOLE
- STORM DRAIN LINE
- TELEPHONE (OVERHEAD)
- TEL SENTRY ☐ TELEPHONE SENTRY
- WM☐ WATER METER
- ☐ POWER TRANSFORMER POLE
- SIZE TYPE ○ TREE (AS NOTED)

ONSITE TREE TABLE

ID	Species	Dbh	Dripline	Classification	Limit of Development LOD	RETAIN	REMOVE
2	Blue spruce	12	16	Significant	10		yes
3	Flowering cherry	14	24	Significant	14		yes
4	Laceleaf Maple	3	5	Small Tree	N/A		yes
5	Mugo Pine	5	8	Small Tree	N/A		yes
8	Leyland cypress	12	18	Significant	10		yes
9	Leyland cypress	5	8	Small Tree	N/A		yes
10	Leyland cypress	4	6	Small Tree	N/A		yes
11	Leyland cypress	4	6	Small Tree	N/A		yes
12	Leyland cypress	3	6	Small Tree	N/A		yes
13	Leyland cypress	10	12	Significant	10	yes	
14	Leyland cypress	10	14	Significant	10	yes	
15	Leyland cypress	10	14	Significant	10	yes	
16	Leyland cypress	6	8	Small Tree	10	yes	
17	Leyland cypress	6	8	Small Tree	10	yes	
18	Hawthorn	10	22	Exeptional	12	yes	
19	Douglas-fir	40	42	Exceptional	116	yes	
20	Big leaf maple	46.0	79	Exceptional	16	yes	
21	Douglas-fir	8	16	Small Tree	10	yes	
22	Douglas-fir	14	30	Significant	16	yes	
23	Goldenchain tree	18		Dead	N/A		yes
24	Vine Maple	10	18	Exceptional	10	yes	
27	Evergreen Magnolia	6	10	Small Tree	14		yes
28	Hawthorn	10	18	Exceptional	18	yes	

OFFSITE

ID	Species	Dbh	Dripline	Classification	Limit of Development LOD	RETAIN	REMOVE
1	Ponderosa Pine	18	28	Significant	15		
6	Saucer magnolia	7	16	Small Tree	10		
25	Leyland Cypress	10	18	Significant	10		
26	Leyland Cypress	10	18	Significant	10		

GRAPHIC SCALE
0
5
10
20
1 inch = 10 feet

PERMIT #: 2402–144

REV. NO.	DATE	DESCRIPTION
2	07/26/24	REVISED HOUSE LAYOUT
1	12/20/23	REVISED DETENTION TANK PER RUJI EMAIL 12/19/2023

DARRELL L. OFFE JR.
27460
07/26/2024

OFFE ENGINEERS
13932 SOUTHEAST 159TH PLACE
RENTON, WASHINGTON 98058
PHONE: 425-260-3412
CONTACT: DARRELL OFFE, P.E.

DESIGNED BY	DRAWN BY	CHECKED BY
DLO	SL$	DLO

PROJECT
4104 83rd Avenue SE

CLIENT
JayMarc Diamond, LLC

SHEET CONTENT
Utility & Tree Plan

DATE 07/26/2024
JOB NO. ____________
DWG NO. ____________

SHEET 2 OF 4

ATTACHMENT 1
CITY OF MERCER ISLAND
ON-SITE DETENTION SYSTEM WORKSHEET
(FOR NEW PLUS REPLACED IMPERVIOUS AREA OF 9,500 SF OR LESS)

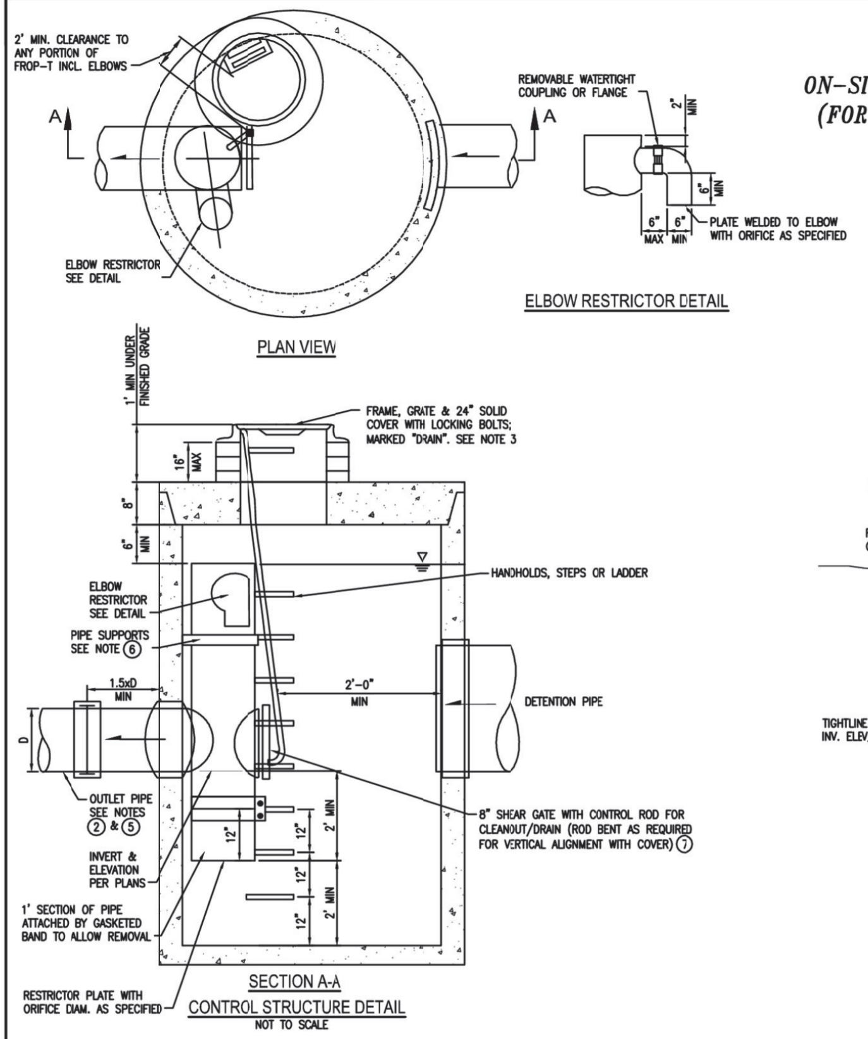
2' MIN. CLEARANCE TO ANY PORTION OF FROP-T INCL. ELBOWS
A
A
ELBOW RESTRICTOR SEE DETAIL
PLAN VIEW
REMOVABLE WATERTIGHT COUPLING OR FLANGE
2" MIN
6" MIN
6" MAX
6" MIN
PLATE WELDED TO ELBOW WITH ORIFICE AS SPECIFIED
ELBOW RESTRICTOR DETAIL
1' MIN UNDER FINISHED GRADE
FRAME, GRATE & 24" SOLID COVER WITH LOCKING BOLTS; MARKED "DRAIN". SEE NOTE 3
16" MAX
8"
6" MIN
HANDHOLDS, STEPS OR LADDER
ELBOW RESTRICTOR SEE DETAIL
PIPE SUPPORTS SEE NOTE ⑥
1.5xD MIN
2'-0" MIN
DETENTION PIPE
D
OUTLET PIPE SEE NOTES ② & ⑤
8" SHEAR GATE WITH CONTROL ROD FOR CLEANOUT/DRAIN (ROD BENT AS REQUIRED FOR VERTICAL ALIGNMENT WITH COVER) ⑦
INVERT & ELEVATION PER PLANS
12"
12"
2' MIN
12"
12"
2' MIN
1' SECTION OF PIPE ATTACHED BY GASKETED BAND TO ALLOW REMOVAL
RESTRICTOR PLATE WITH ORIFICE DIAM. AS SPECIFIED
SECTION A-A

CONTROL STRUCTURE DETAIL
NOT TO SCALE

OWNER: ____	ADDRESS: ____	PREPARED BY: ____
PERMIT #: ____	____	PHONE: ____
		DATE: ____
NEW PLUS REPLACED IMPERVIOUS SURFACE AREA (SF): ____	DETENTION PIPE DIA (INCH): ____	DETENTION PIPE LENGTH (FT): ____
SOIL TYPE: ____	PIPE MATERIAL: ____	

ORIFICE #1 DIA ___ INCH, ELEV ____
ORIFICE #2 DIA ___ INCH, ELEV ____

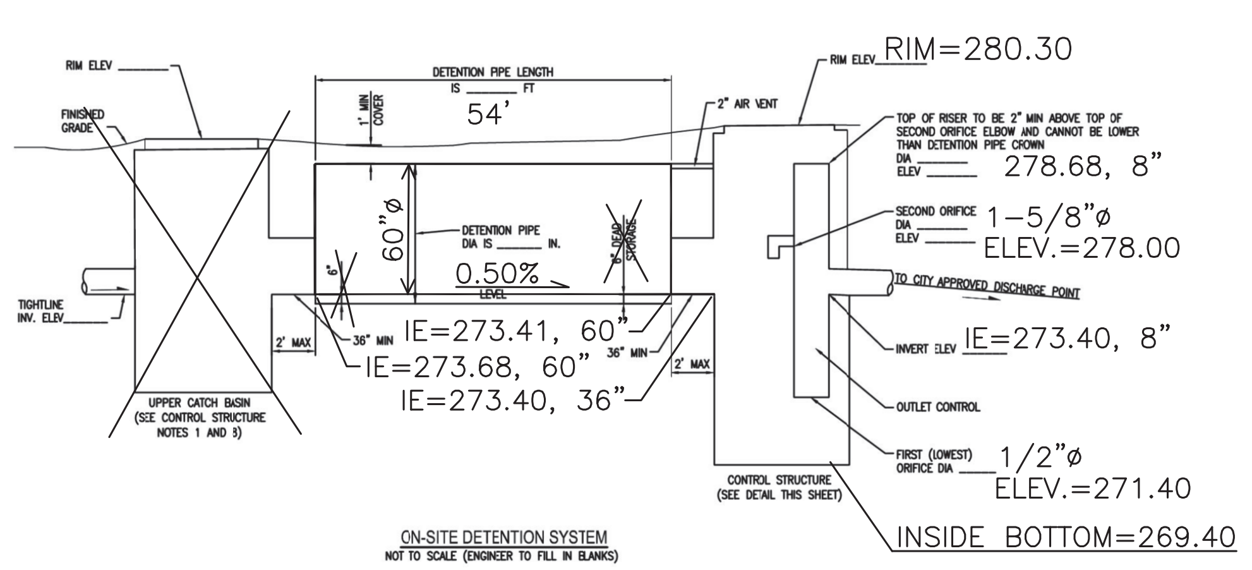
RIM ELEV ____
FINISHED GRADE
TIGHTLINE INV. ELEV ____
UPPER CATCH BASIN (SEE CONTROL STRUCTURE NOTES 1 AND 8)
2' MAX
36" MIN
DETENTION PIPE LENGTH IS ____ FT
54'
1' MIN COVER
60"ø
DETENTION PIPE DIA IS ____ IN.
0.50%
LEVEL
6"
6" DEAD STORAGE
IE=273.41, 60"
IE=273.68, 60"
IE=273.40, 36"
36" MIN
2' MAX
2" AIR VENT
RIM ELEV RIM=280.30
TOP OF RISER TO BE 2" MIN ABOVE TOP OF SECOND ORIFICE ELBOW AND CANNOT BE LOWER THAN DETENTION PIPE CROWN
DIA ____ ELEV ____ 278.68, 8"
SECOND ORIFICE DIA ____ ELEV ____ 1-5/8"ø ELEV.=278.00
TO CITY APPROVED DISCHARGE POINT
INVERT ELEV IE=273.40, 8"
OUTLET CONTROL
FIRST (LOWEST) ORIFICE DIA ____ 1/2"ø ELEV.=271.40
CONTROL STRUCTURE (SEE DETAIL THIS SHEET)
INSIDE BOTTOM=269.40

ON-SITE DETENTION SYSTEM
NOT TO SCALE (ENGINEER TO FILL IN BLANKS)

CB#1, CONTROL STRUCTURE, TYPE II–54"ø

CONTROL STRUCTURE NOTES:

① USE A MINIMUM OF A 54 IN. DIAM. TYPE 2 CATCH BASIN. THE ACTUAL SIZE IS DEPENDENT ON CONNECTING PIPE MATERIAL AND DIAMETER.

② OUTLET PIPE: MIN. 6 INCH.

③ METAL PARTS: CORROSION RESISTANT. NON-GALVANIZED PARTS PREFERRED. GALVANIZED PIPE PARTS TO HAVE ASPHALT TREATMENT 1.

④ FRAME AND LADDER OR STEPS OFFSET SO:
  A. CLEANOUT GATE IS VISIBLE FROM TOP;
  B. CLIMB-DOWN SPACE IS CLEAR OF RISER AND CLEANOUT GATE;
  C. FRAME IS CLEAR OF CURB.

⑤ IF METAL OUTLET PIPE CONNECTS TO CEMENT CONCRETE PIPE, OUTLET PIPE TO HAVE SMOOTH O.D. EQUAL TO CONCRETE PIPE I.D. LESS 1/4 IN.

⑥ PROVIDE AT LEAST ONE 3 X 0.090 GAUGE SUPPORT BRACKET ANCHORED TO CONCRETE WALL WITH 5/8 IN. STAINLESS STEEL EXPANSION BOLTS OR EMBEDDED SUPPORTS 2 IN. INTO CATCH BASIN WALL (MAXIMUM 3'-0" VERTICAL SPACING).

⑦ THE SHEAR GATE SHALL BE MADE OF ALUMINUM ALLOY IN ACCORDANCE WITH ASTM B 26M AND ASTM B 275, DESIGNATION ZG32A; OR CAST IRON IN ACCORDANCE WITH ASTM A 48, CLASS 30B.
THE LIFT HANDLE SHALL BE MADE OF A SIMILAR METAL TO THE GATE (TO PREVENT GALVANIC CORROSION), IT MAY BE OF SOLID ROD OR HOLLOW TUBING, WITH ADJUSTABLE HOOK AS REQUIRED.
A NEOPRENE RUBBER GASKET IS REQUIRED BETWEEN THE RISER MOUNTING FLANGE AND THE GATE FLANGE.
INSTALL THE GATE SO THAT THE LEVEL-LINE MARK IS LEVEL WHEN THE GATE IS CLOSED.
THE MATING SURFACES OF THE LID AND THE BODY SHALL BE MACHINED FOR PROPER FIT.
ALL SHEAR GATE BOLTS SHALL BE STAINLESS STEEL.

⑧ THE UPPER CATCH BASIN IS REQUIRED IF THE LENGTH OF THE DETENTION PIPE IS GREATER THAN 50 FT.

ON-SITE DETENTION SYSTEM NOTES:

1. CALL DEVELOPMENT SERVICES (206-275-7605) 24 HOURS IN ADVANCE FOR A DETENTION SYSTEM INSPECTION BEFORE BACKFILLING AND FOR FINAL INSPECTIONS.
2. RESPONSIBILITY FOR OPERATION AND MAINTANANCE OF DRAINAGE SYSTEMS ON PRIVATE PROPERTY IS RESPONSIBILITY OF THE PROPERTY OWNER. MATERIAL ACCUMULATED IN THE STORAGE PIPE MUST BE REMOVED FROM CATCH BASINS TO ALLOW PROPER OPERATION. THE OUTLET CONTROL ORIFICE MUST BE KEPT OPEN AT ALL TIMES.
3. PIPE MATERIAL, JOINT, AND PROTECTIVE TREATMENT SHALL BE IN ACCORDANCE WITH SECTION 7.04 AND 9.05 OF THE WSDOT STANDARD SPECIFICATION FOR ROAD, BRIDGE, AND MUNICIPAL CONSTRUCTION, LATEST VERSION. SUCH MATERIALS INCLUDE THE FOLLOWING, LINED CORRUGATED POLYETHYLENE PIPE (LCPE), ALUMINIZED TYPE 2 CORRUGATED STEEL PIPE AND PIPE ARCH (MEETS AASHTO DESIGNATIONS M274 AND M36), CORRUGATED OR SPIRAL RIB ALUMINUM PIPE, OR REINFORCED CONCRETE PIPE. CORRUGATED STEEL PIPE IS NOT ALLOWED.
4. FOOTING DRAINS SHALL NOT BE CONNECTED TO THE DETENTION SYSTEM.

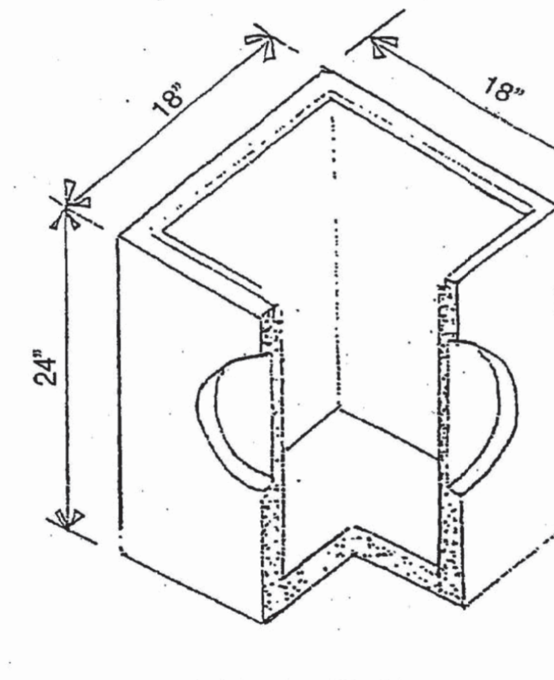

Catch Basin (C.B.)
Depth & Volume are
Minimum Dimensions.

Minimum Volume = 24 gal.

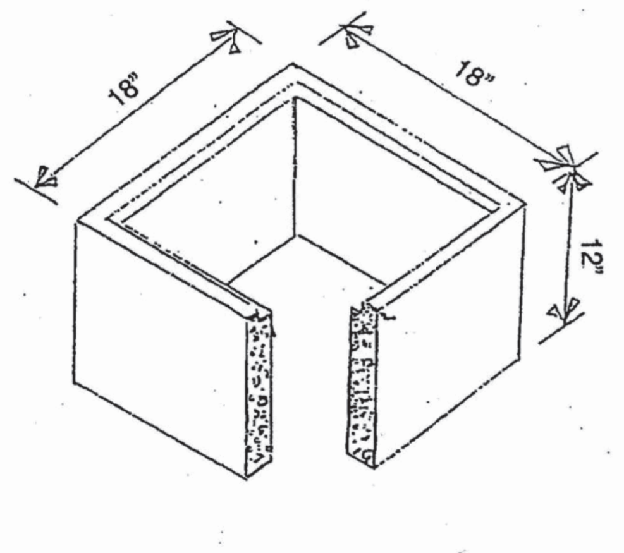

6" & 12" Adjustment Riser

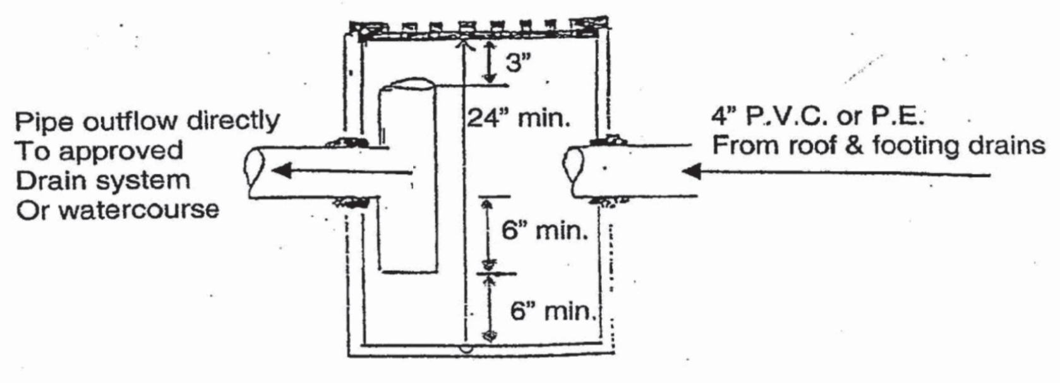
Pipe outflow directly
To approved
Drain system
Or watercourse
3"
24" min.
6" min.
6" min.
4" P.V.C. or P.E.
From roof & footing drains

Catch Basin with Oil Separator

S:\DSG\FORMS\StormDrainageRequirements.doc 01/2010

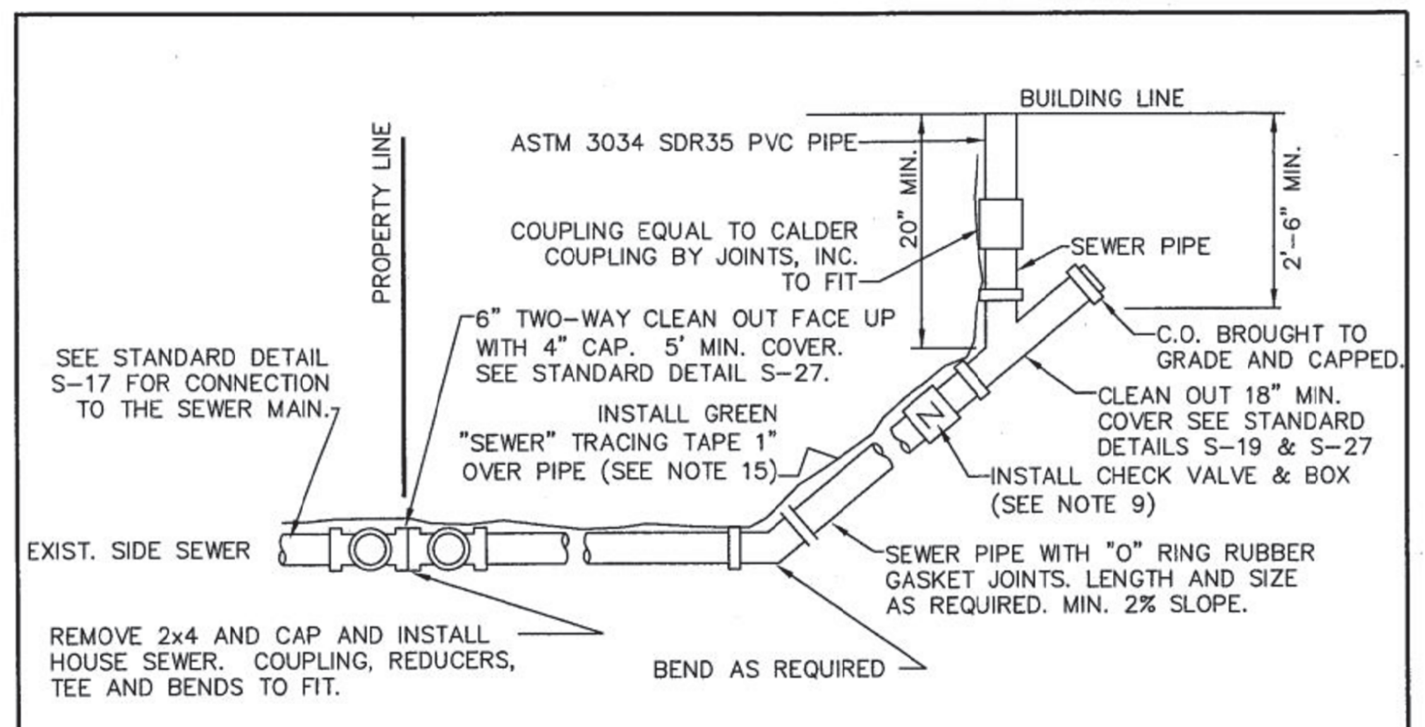
BUILDING LINE
PROPERTY LINE
ASTM 3034 SDR35 PVC PIPE
20" MIN.
2'-6" MIN.
COUPLING EQUAL TO CALDER COUPLING BY JOINTS, INC. TO FIT
SEWER PIPE
6" TWO-WAY CLEAN OUT FACE UP WITH 4" CAP. 5' MIN. COVER. SEE STANDARD DETAIL S-27.
C.O. BROUGHT TO GRADE AND CAPPED.
SEE STANDARD DETAIL S-17 FOR CONNECTION TO THE SEWER MAIN.
INSTALL GREEN "SEWER" TRACING TAPE 1" OVER PIPE (SEE NOTE 15)
CLEAN OUT 18" MIN. COVER SEE STANDARD DETAILS S-19 & S-27
INSTALL CHECK VALVE & BOX (SEE NOTE 9)
EXIST. SIDE SEWER
SEWER PIPE WITH "O" RING RUBBER GASKET JOINTS. LENGTH AND SIZE AS REQUIRED. MIN. 2% SLOPE.
REMOVE 2x4 AND CAP AND INSTALL HOUSE SEWER. COUPLING, REDUCERS, TEE AND BENDS TO FIT.
BEND AS REQUIRED

BUILDING CONNECTION

NOTES

1. ELBOWS SHALL NOT BE GREATER THAN 45 DEGREES.
2. CLEAN OUT IS REQUIRED FOR EACH PIPE LENGTH GREATER THAN 100' AND FOR EACH 90° ACCUMULATED ELBOW/100'.
3. ALL HOUSE PLUMBING OUTLETS MUST BE CONNECTED TO THE SEWER. NO DOWN SPOUTS OR STORM DRAINAGE MAY BE CONNECTED TO THE SEWER SYSTEM.
4. 18" MINIMUM COVERAGE OVER PIPE.
5. LAY PIPE IN STRAIGHT LINE BETWEEN BENDS. MAKE ALL CHANGES IN GRADE OR LINE WITH $\frac{1}{8}$ BEND OR WYE. 90° CHANGE WITH 1/8 BEND AND WYE.
6. 4" SEWER PIPE MINIMUM SIZE ON PROPERTY. 2% MINIMUM GRADE.
7. ALL CONSTRUCTION SHALL BE IN ACCORDANCE WITH CURRENT SEWER ORDINANCES.
8. ALL CONSTRUCTION REQUIRES A PLAN SHOWING PROPERTY AND DIMENSIONS AND COMPLETION OF SIDE SEWER APPLICATION AND MAINTENANCE AGREEMENT, AS NEEDED.
9. BACK WATER VALVE (CHECK VALVE) IS REQUIRED:
   A. IF CONNECTED TO A SHARED SIDE SEWER.
   B. IF CONNECTION AT HOUSE IS LOWER THAN BOTH UPSTREAM AND DOWNSTREAM MANHOLE.
   C. SEE S-23 & S-24 FOR LAKE LINE REQUIREMENTS.
10. AS-BUILT DRAWING SHOWING LOCATION OF SIDE SEWER & ALL BENDS, C.O. ETC., IN RELATION TO THE HOUSE IS REQUIRED AFTER INSPECTION & INSTALLATION. SEE STANDARD DETAIL S-38 FOR A TYPICAL "AS BUILT".
11. THE MINIMUM PIPE SIZE FOR SIDE SEWERS SHALL BE:
    6" – WITHIN THE PUBLIC RIGHT-OF-WAY.
    4" – SINGLE FAMILY RESIDENCES.
    6" – 2 TO 6 SINGLE FAMILY RESIDENCES.
    6" – BUILDINGS OTHER THAN SINGLE FAMILY RESIDENCES.
12. UTILITY PIPE TRACER TAPE SHALL BE DETECTABLE BELOW GROUND SURFACE, COLOR CODED, WITH UTILITY NAME PRINTED ON TAPE. CONDUCTIVE WARNING TAPE REQUIRED OVER ALL WATER PIPE. TAPE SHALL BE MANUFACTURER'S STANDARD PERMANENT, BRIGHT-COLORED, CONTINUOUS PRINTED PLASTIC TAPE, ALUMINUM BACKED, INTENDED FOR DIRECT-BURIAL SERVICE. TAPE SHALL BE NOT LESS THAN 6" WIDE X 4 MILS THICK.

CITY OF MERCER ISLAND
STANDARD DETAILS
SEWER

HOUSE SEWER CONNECTION

6-5-2009	NO SCALE	**S-18**

REV DATE						APPROVED

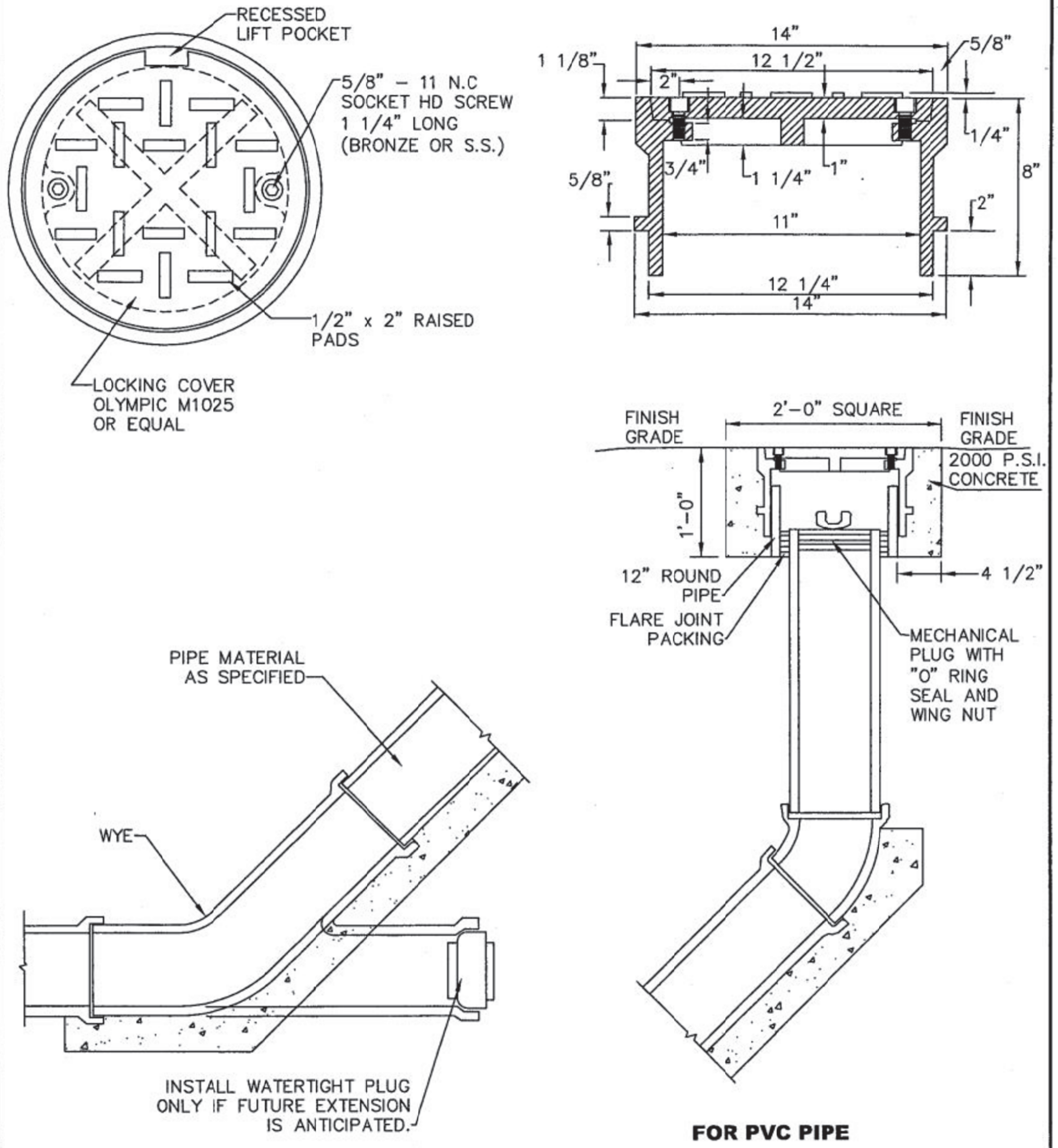
RECESSED LIFT POCKET
5/8" – 11 N.C SOCKET HD SCREW 1 1/4" LONG (BRONZE OR S.S.)
1/2" x 2" RAISED PADS
LOCKING COVER OLYMPIC M1025 OR EQUAL
14"
12 1/2"
1 1/8"
2"
5/8"
1/4"
3/4"
1 1/4"
1"
5/8"
8"
2"
11"
12 1/4"
14"
FINISH GRADE
2'-0" SQUARE
FINISH GRADE
2000 P.S.I. CONCRETE
1'-0"
12" ROUND PIPE
4 1/2"
FLARE JOINT PACKING
MECHANICAL PLUG WITH "O" RING SEAL AND WING NUT
PIPE MATERIAL AS SPECIFIED
WYE
INSTALL WATERTIGHT PLUG ONLY IF FUTURE EXTENSION IS ANTICIPATED.

FOR PVC PIPE

NOTES

1. SEE S-27 FOR INSTALLATION DETAILS.

CITY OF MERCER ISLAND
STANDARD DETAILS
SEWER

CLEAN OUT DETAIL

6-5-2009	NO SCALE	**S-19**

REV DATE						APPROVED

DRAWN BY: FERN LIDDELL

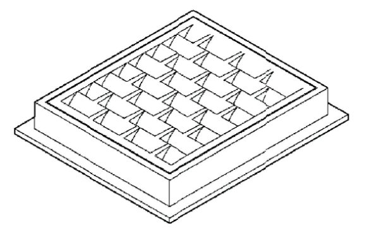

FRAME AND VANED GRATE

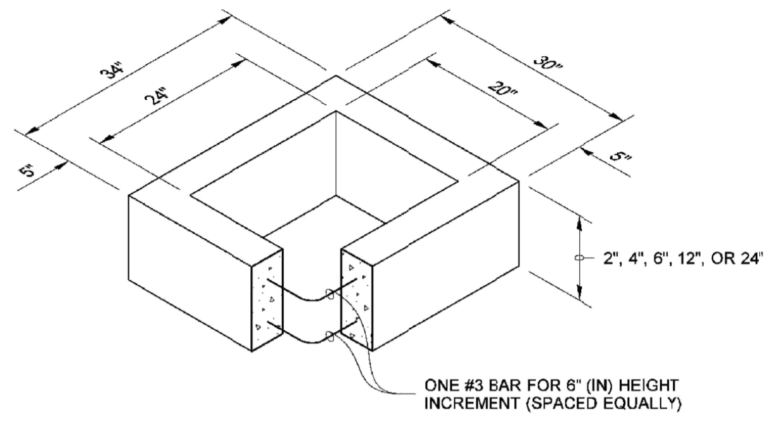
34"
24"
5"
30"
20"
5"
2", 4", 6", 12", OR 24"
ONE #3 BAR FOR 6" (IN) HEIGHT INCREMENT (SPACED EQUALLY)

RECTANGULAR ADJUSTMENT SECTION

PIPE ALLOWANCES	
PIPE MATERIAL	**MAXIMUM INSIDE DIAMETER (INCHES)**
REINFORCED OR PLAIN CONCRETE	12"
ALL METAL PIPE	15"
CPSSP * **(STD. SPEC. SECT. 9-05.20)**	12"
SOLID WALL PVC **(STD. SPEC. SECT. 9-05.12(1))**	15"
PROFILE WALL PVC **(STD. SPEC. SECT. 9-05.12(2))**	15"

* CORRUGATED POLYETHYLENE STORM SEWER PIPE

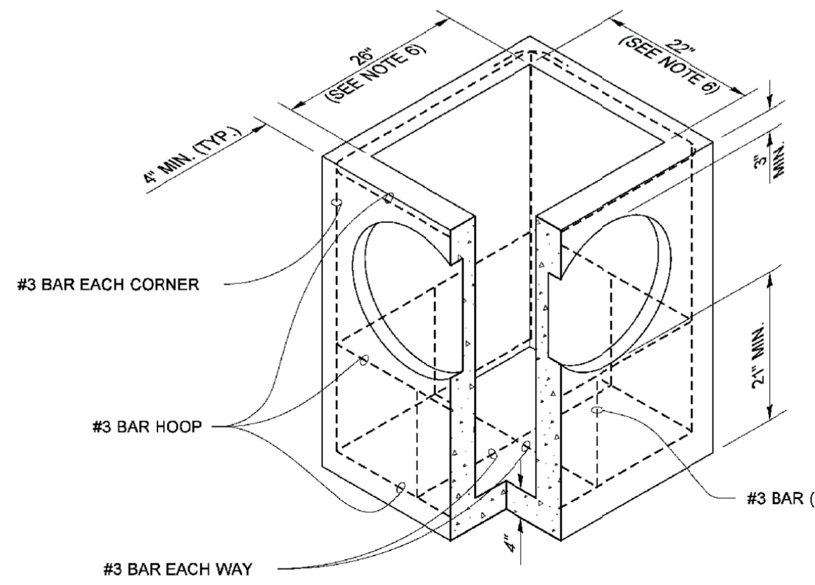
4" MIN. (TYP.)
26" (SEE NOTE 6)
22" (SEE NOTE 6)
3" MIN.
21" MIN.
4"
#3 BAR EACH CORNER
#3 BAR HOOP
#3 BAR (TYP.)
#3 BAR EACH WAY

PRECAST BASE SECTION

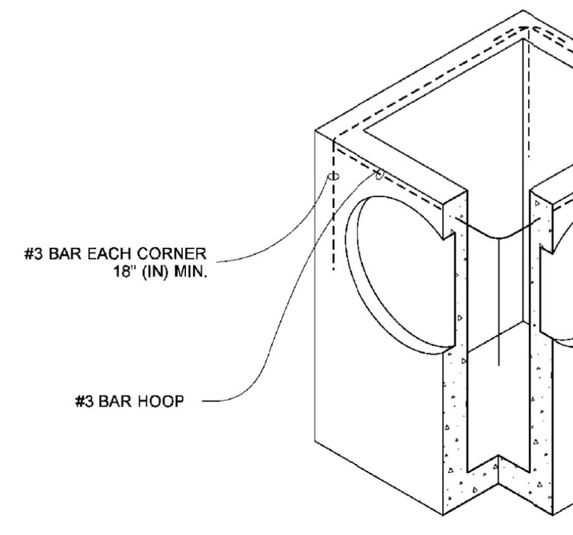
#3 BAR EACH CORNER 18" (IN) MIN.
#3 BAR HOOP

(SEE NOTE 1)

ALTERNATIVE PRECAST BASE SECTION

NOTES

1. As acceptable alternatives to the rebar shown in the **PRECAST BASE SECTION**, fibers (placed according to the Standard Specifications), or wire mesh having a minimum area of 0.12 square inches per foot shall be used with the minimum required rebar shown in the **ALTERNATIVE PRECAST BASE SECTION**. Wire mesh shall not be placed in the knockouts.
2. The knockout diameter shall not be greater than 20" (in). Knockouts shall have a wall thickness of 2" (in) minimum to 2.5" (in) maximum. Provide a 1.5" (in) minimum gap between the knockout wall and the outside of the pipe. After the pipe is installed, fill the gap with joint mortar in accordance with **Standard Specification Section 9-04.3**.
3. The maximum depth from the finished grade to the lowest pipe invert shall be 5' (ft).
4. The frame and grate may be installed with the flange down, or integrally cast into the adjustment section with flange up.
5. The Precast Base Section may have a rounded floor, and the walls may be sloped at a rate of 1 : 24 or steeper.
6. The opening shall be measured at the top of the **Precast Base Section**.
7. All pickup holes shall be grouted full after the basin has been placed.

JULIE HEILMAN 41819

Julie Heilman Julie Heilman
2020.09.01 07:52:50 -07'00'

CATCH BASIN TYPE 1

STANDARD PLAN B-5.20-03

SHEET 1 OF 1 SHEET

APPROVED FOR PUBLICATION
Roark, Steve Digitally signed by Roark, Steve Date: 2020.09.09 09:45:23 -07'00'
STATE DESIGN ENGINEER
Washington State Department of Transportation

PERMIT #: 2402–144

REV. NO.	DATE	DESCRIPTION
1	12/20/23	REVISED DETENTION TANK PER RUJI EMAIL 12/19/2023
2	07/26/24	REVISED HOUSE LAYOUT

DARRELL L. OFFE, JR. 27460
07/26/2024

OFFE ENGINEERS
13932 SOUTHEAST 159TH PLACE
RENTON, WASHINGTON 98058
PHONE: 425-260-3412
CONTACT: DARRELL OFFE, P.E.

DESIGNED BY	DRAWN BY	CHECKED BY
DLO	SL$	DLO

PROJECT
4104 83rd Avenue SE

CLIENT
JayMarc Diamond, LLC

SHEET CONTENT
Utility Details

DATE 07/26/2024
JOB NO. ____
DWG NO. ____

SHEET 3 OF 4

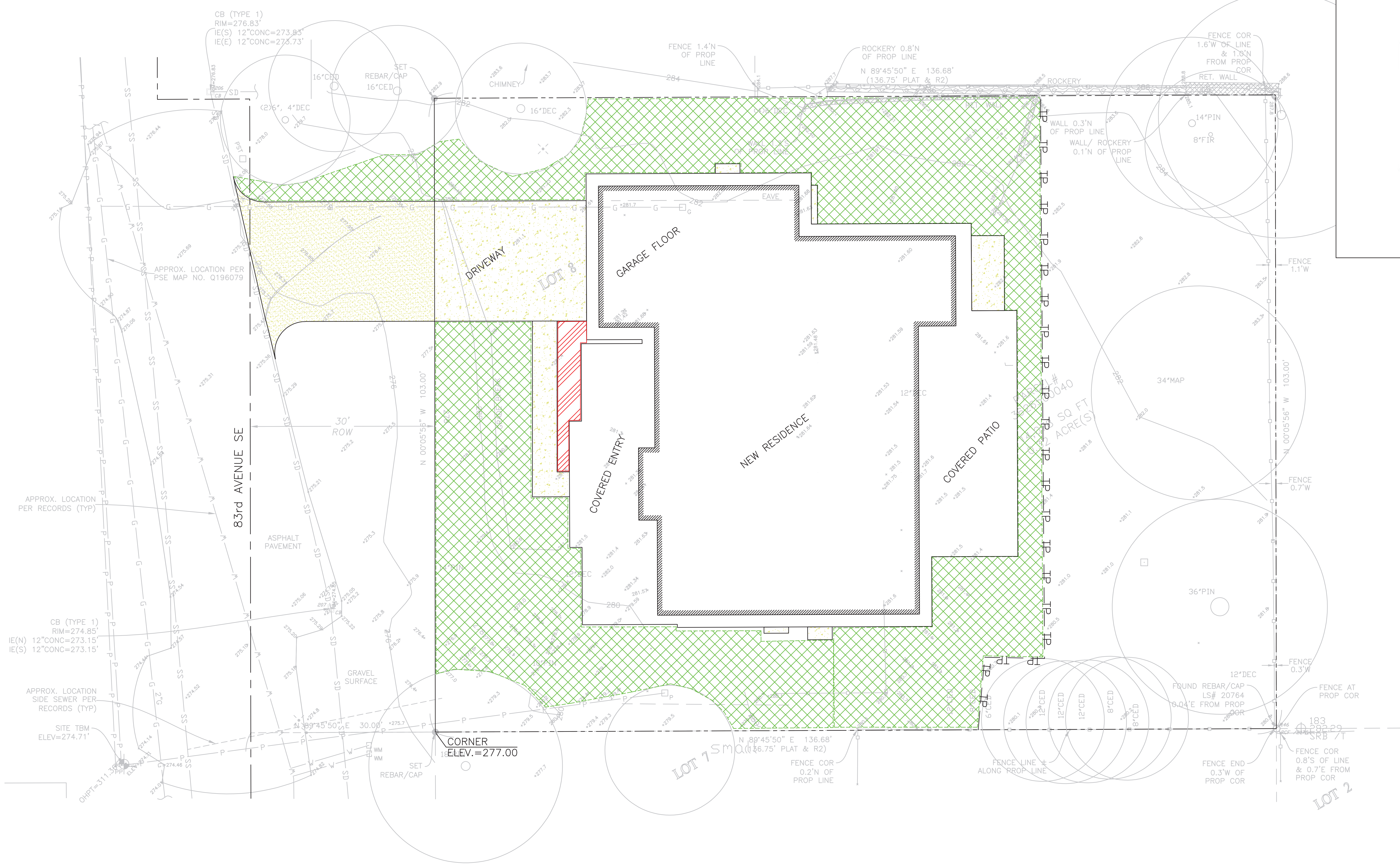
83rd AVENUE SE
30' ROW
DRIVEWAY
LOT 8
GARAGE FLOOR
NEW RESIDENCE
COVERED ENTRY
COVERED PATIO
ASPHALT PAVEMENT
GRAVEL SURFACE
CB (TYPE 1) RIM=276.83' IE(S) 12"CONC=273.83' IE(E) 12"CONC=273.73'
CB (TYPE 1) RIM=274.85 IE(N) 12"CONC=273.15' IE(S) 12"CONC=273.15'
APPROX. LOCATION PER PSE MAP NO. Q196079
APPROX. LOCATION PER RECORDS (TYP)
APPROX. LOCATION SIDE SEWER PER RECORDS (TYP)
SITE TBM ELEV=274.71'
CORNER ELEV.=277.00
SET REBAR/CAP
16"CED
16"DEC
CHIMNEY
FENCE 1.4'N OF PROP LINE
ROCKERY 0.8'N OF PROP LINE
N 89°45'50" E 136.68' (136.75' PLAT & R2)
ROCKERY
RET. WALL
FENCE COR 1.6'W OF LINE & 1.6'N FROM PROP COR
WALL 0.3'N OF PROP LINE
WALL/ ROCKERY 0.1'N OF PROP LINE
14"PIN
8"FIR
34"MAP
36"PIN
N 00°05'58" W 103.00'
FENCE 1.1'W
FENCE 0.7'W
FENCE 0.3'W
FENCE AT PROP COR
FOUND REBAR/CAP LS# 20764 0.04'E FROM PROP COR
12"DEC
FENCE LINE ALONG PROP LINE
FENCE END 0.3'W OF PROP COR
FENCE COR 0.8'S OF LINE & 0.7'E FROM PROP COR
FENCE COR 0.2'N OF PROP LINE
30.00'
LOT 7
LOT 2

pH TO BE BETWEEN 6–10

ORGANIC MATTER W.B. TO BE 10% OR GREATER

Figure V-11.1: Planting Bed Cross-Section

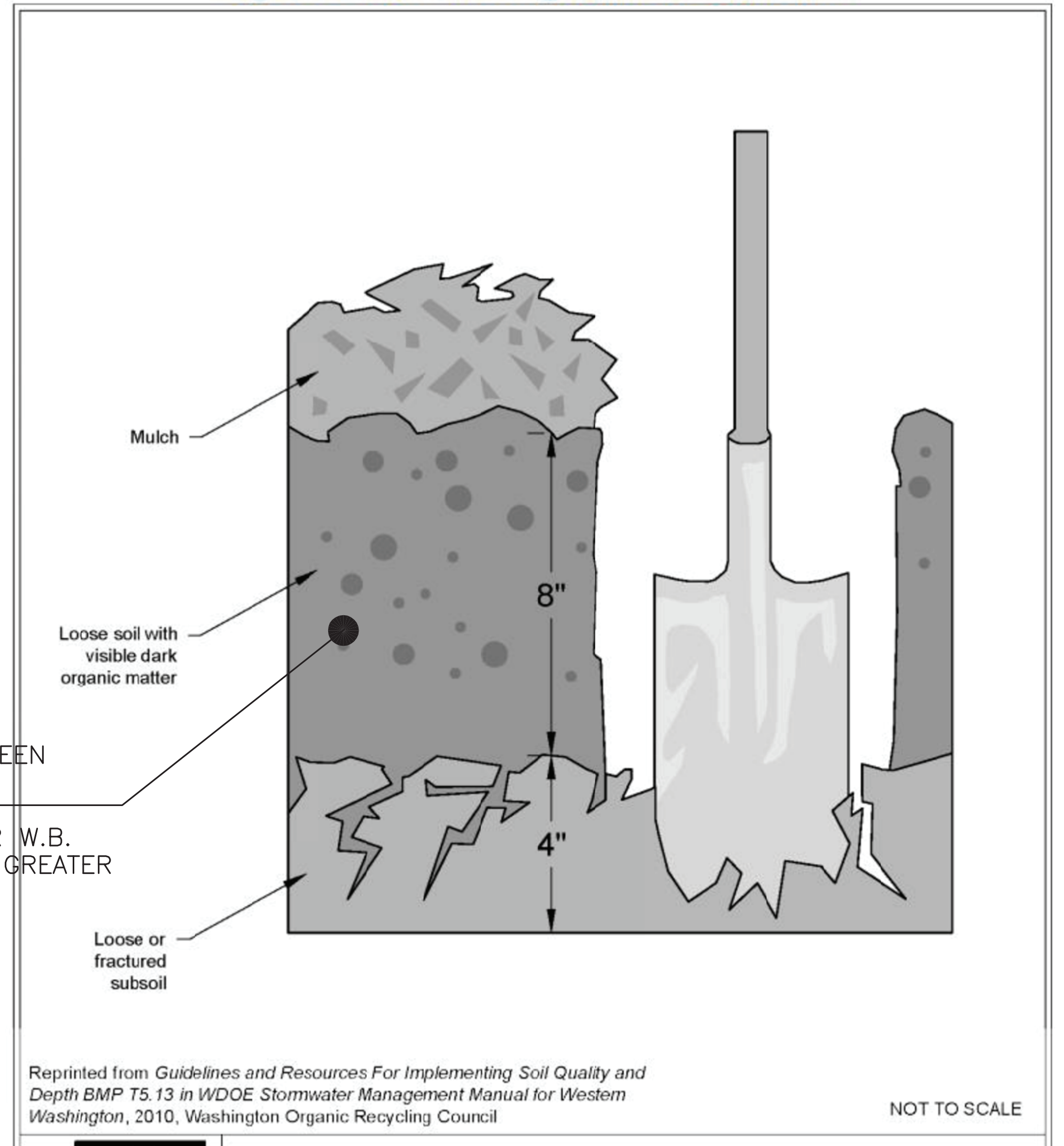
Mulch
Loose soil with visible dark organic matter
Loose or fractured subsoil
8"
4"

Reprinted from *Guidelines and Resources For Implementing Soil Quality and Depth BMP T5.13 in WDOE Stormwater Management Manual for Western Washington*, 2010, Washington Organic Recycling Council

NOT TO SCALE

DEPARTMENT OF ECOLOGY State of Washington

Planting Bed Cross-Section

Revised June 2016

Please see *http://www.ecy.wa.gov/copyright.html* for copyright notice including permissions, limitation of liability, and disclaimer.

2019 Stormwater Management Manual for Western Washington

Volume V - Chapter 11 - Page 930

AMENDED SOIL MAP

🟩	4,045 SQUARE FEET – TURF AREA AMENDED 12" DEEP (150 CU. YDS.)
🟥	78 SQUARE FEET – PLANTER AREA AMENDED 8" DEEP (2 CU. YDS.)

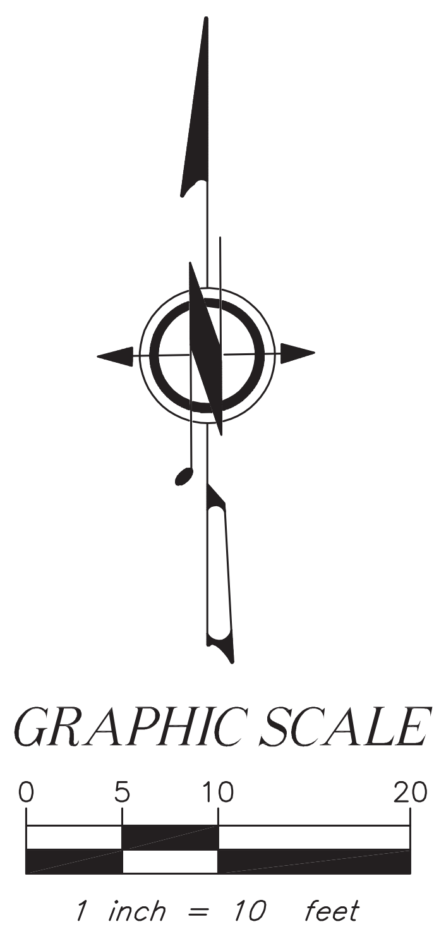
GRAPHIC SCALE
0
5
10
20
1 inch = 10 feet

PERMIT #: 2402–144

REV. NO.	DATE	DESCRIPTION
1	07/26/24	REVISED HOUSE LAYOUT

DARRELL L. OFFE JR. 27460
07/26/2024

OFFE ENGINEERS
13932 SOUTHEAST 159TH PLACE
RENTON, WASHINGTON 98058
PHONE: 425-260-3412
CONTACT: DARRELL OFFE, P.E.

DESIGNED BY DLO
DRAWN BY SL$
CHECKED BY DLO

PROJECT
4104 83rd Avenue SE

CLIENT
JayMarc Diamond, LLC

SHEET CONTENT
Amended Soil Map & Detail

DATE 07/26/2024
JOB NO. ____________
DWG NO. ____________

SHEET 4 OF 4

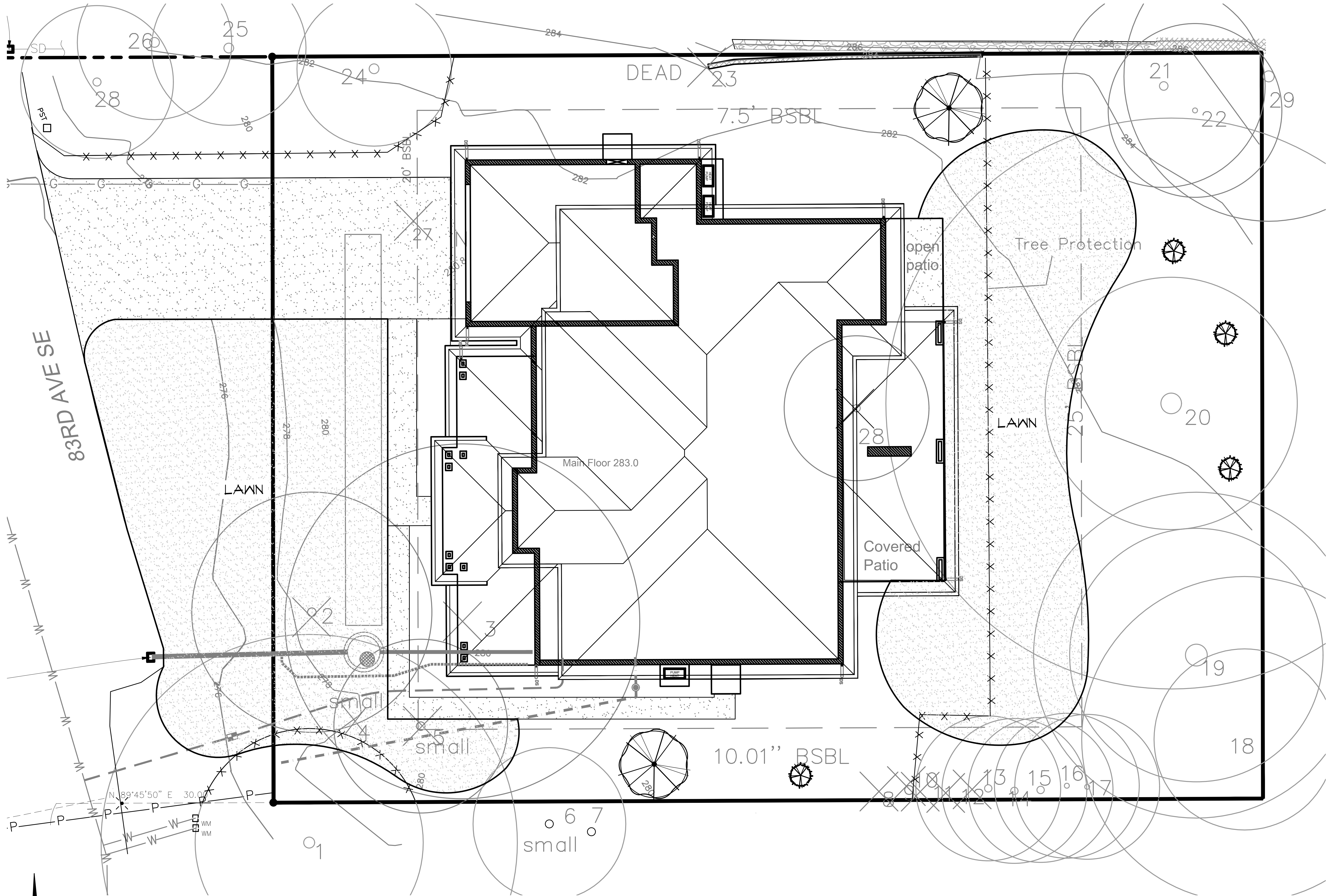
83RD AVE SE
LAWN
LAWN
DEAD
7.5' BSBL
20' BSBL
25' BSBL
10.01'' BSBL
Tree Protection
open patio
Main Floor 283.0
Covered Patio
small
small
small
24
25
26
28
23
21
22
29
27
28
20
19
18
22
3
4
6
7
1
8
13
15
16
17

LANDSCAPE PLAN

SCALE: 1" = 10' - 0"

GRAPHIC SCALE

-10 0 5 10 20

(IN FEET)
1 inch = 10 feet

PLANT SCHEDULE

SYMBOL	BOTANICAL / COMMON NAME	SIZE	QTY
REPLACEMENT TREE			
✱	Cornus nuttallii / Pacific Dogwood NATIVE	2"Cal	2
✲	Tsuga mertensiana / Mountain Hemlock NATIVE	8' Ht. min.	4

NOTES:

1. CONTRACTOR SHALL BE RESPONSIBLE FOR FAMILIARIZING THEMSELVES WITH ALL OTHER SITE IMPROVEMENTS AND CONDITIONS PRIOR TO STARTING LANDSCAPE WORK.

2. CONTRACTOR SHALL USE CAUTION WHILE EXCAVATING TO AVOID DISTURBING ANY UTILITIES ENCOUNTERED. CONTRACTOR IS TO PROMPTLY ADVISE OWNER OF ANY DISTURBED UTILITIES. LOCATION SERVICE HONE 1-800-424-5555.

3. CONTRACTOR SHALL MAINTAIN AND WATER ALL PLANT MATERIAL FOR 1 YEAR OR UNTIL FINAL INSPECTION AND ACCEPTANCE BY OWNER.

4. CONTRACTOR SHALL BE RESPONSIBLE FOR PROVIDING QUANTITIES OF PLANTS THAT ARE REPRESENTED BY SYMBOLS ON THE DRAWING.

5. SUBGRADE IS TO BE WITHIN $\frac{1}{10}$ INCH OF 1 FOOT AS PROVIDED BY OTHERS. ALL PLANTING AREAS TO BE CLEARED OF ALL CONSTRUCTION MATERIAL AND ROCKS & STICKS LARGER THAN 2 INCH DIAMETER.

6. 4 INCH DEPTH TOPSOIL IN LANDSCAPE AREA.

7. 2 INCH DEPTH, 3 FOOT DIAMETER BARK RING AROUND BASE OF STREET TREES AND OTHER TREES LOCATED IN LAWN.

8. TREES SHOULD BE PLANTED SO THAT THE CENTER OF EACH TRUNK IS 3 FEET FROM THE BACK OF CURB OR IF PLANTED BEHIND A SIDEWALK 3 FEET FROM THE BACK OF A SIDEWALK. WHERE TREES ARE TO BE PLANTED ADJACENT TO A SIDEWALK, A ROOT BARRIER SHALL BE INSTALLED ON THE SIDEWALK SIDE OF EACH TREE PARALLEL TO AND 6 INCHES FROM THE SIDEWALK. THE BARRIER SHALL BE 15 FEET LONG, CENTERED HORIZONTALLY ON THE TREE TRUNK AND EXTEND FROM THE GROUND SURFACE TO A DEPTH OF 18 INCHES.

9. GROUND COVERS SHALL BE PLANTED IN AN EQUILATERAL TRIANGULAR SPACING PATTERN AT THE ON-CENTER DISTANCES SHOWN ON THE PLAN OR IN THE PLANT SCHEDULE. WHERE GROUND COVER ABUTS CURBING, SIDEWALKS, SIGNS OR POLES, MINIMUM PLANTING DISTANCES SHALL BE 12" FROM CENTER OF PLANT TO CURB, SIDEWALK, ETC. MINIMUM PLANTING DISTANCE SHALL BE 24" FROM CENTER OF TREES AND SHRUBS.

10. ALL PLANT MATERIAL SHALL BE FERTILIZED WITH AGRO TRANSPLANT FERTILIZER 4-2-2 PER MANUFACTURERS SPECIFICATIONS.

11. ALL PLANT MATERIAL SHALL CONFORM TO AAN STANDARDS FOR NURSERY STOCK LATEST EDITION. ALL PLANT MATERIAL FURNISHED SHALL BE HEALTHY REPRESENTATIVES, TYPICAL OF THEIR SPECIES OF VARIETY AND SHALL HAVE A NORMAL GROWTH HABIT. THEY SHALL BE FULL, WELL BRANCHED, WELL PROPORTIONED, AND HAVE A VIGOROUS WELL DEVELOPED ROOT SYSTEM. ALL PLANTS SHALL BE HARDY UNDER CLIMATIC CONDITIONS SIMILAR TO THOSE IN THE LOCALITY OF THE PROJECT. TREES, SHRUBS AND GROUNDCOVER QUANTITIES, SPECIES, VARIETIES, SIZES AND CONDITIONS TO BE AS SHOWN ON THE PLANTING PLAN. PLANTS TO BE FREE OF DISEASE, INJURY, INSECTS, DECAY, HARMFUL DEFECTS AND ALL WEEDS. NO SUBSTITUTIONS SHALL BE MADE WITHOUT WRITTEN APPROVAL FROM LANDSCAPE ARCHITECT O OWNER.

12. NO PERMANENT IRRIGATION SYSTEM IS PROPOSED. TEMPORARY IRRIGATION SHALL BE REQUIRED FOR THE FIRST 3 YEARS OR UNTIL PROPOSED PLANT MATERIAL IS ESTABLISHED. PLANT MATERIAL SPECIFIED TO BE NATIVE OR DROUGHT TOLERANT AS DETERMINED BY LANDSCAPE ARCHITECT.

13. TREES TO BE PLANTED A MINIMUM 5 FEET FROM PROJECT BOUNDARIES.

14. AN IRRIGATION SYSTEM WILL BE INSTALLED AND TREES WILL BE WATERED EVERY 3 DAY FOR 10 MINUTES FROM MAY THRU SEPTEMBER.

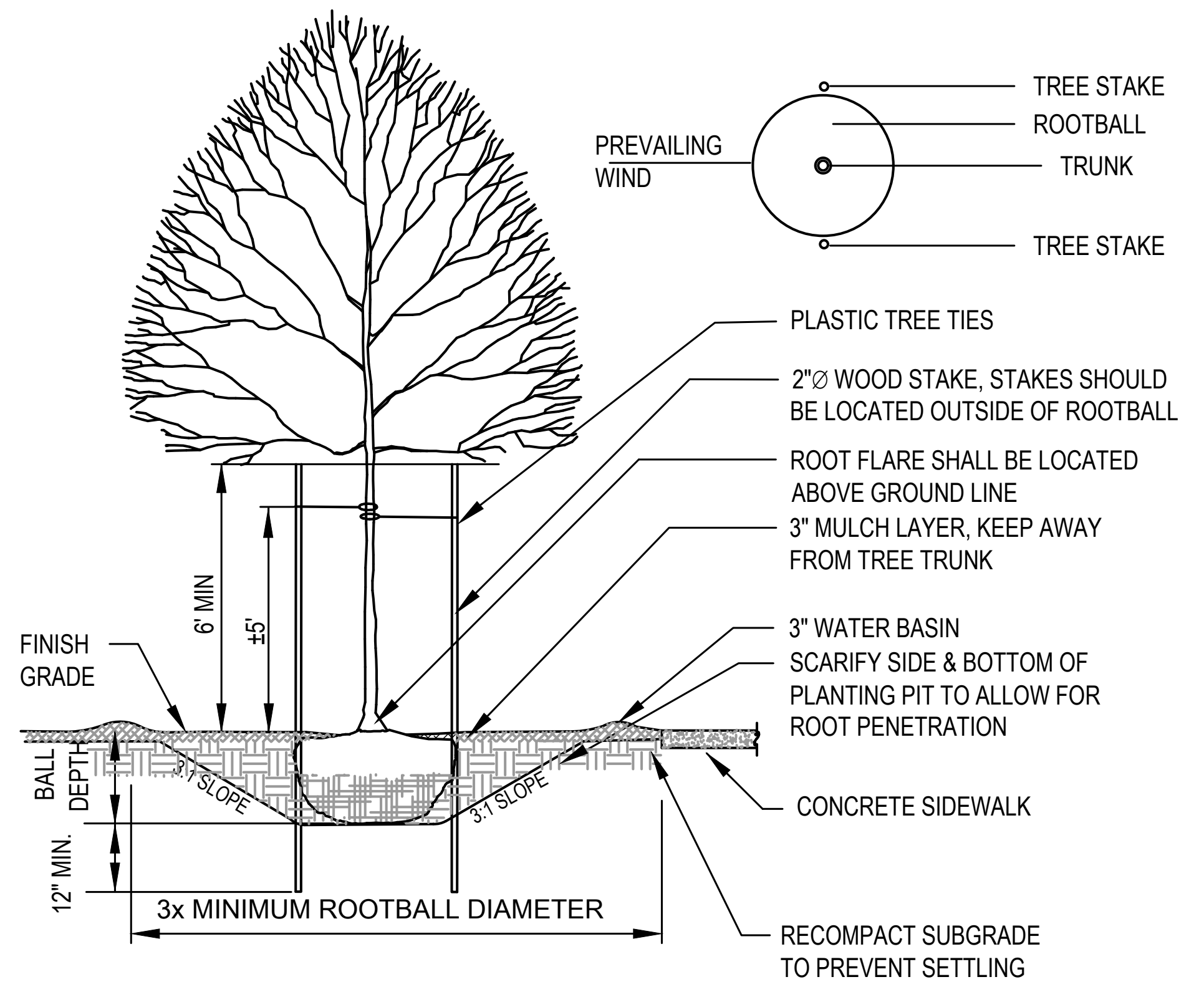
PREVAILING WIND
TREE STAKE
ROOTBALL
TRUNK
TREE STAKE
PLASTIC TREE TIES
2"∅ WOOD STAKE, STAKES SHOULD BE LOCATED OUTSIDE OF ROOTBALL
ROOT FLARE SHALL BE LOCATED ABOVE GROUND LINE
3" MULCH LAYER, KEEP AWAY FROM TREE TRUNK
3" WATER BASIN
SCARIFY SIDE & BOTTOM OF PLANTING PIT TO ALLOW FOR ROOT PENETRATION
CONCRETE SIDEWALK
RECOMPACT SUBGRADE TO PREVENT SETTLING
FINISH GRADE
6' MIN
±5'
BALL DEPTH
12" MIN.
3:1 SLOPE
3:1 SLOPE
3x MINIMUM ROOTBALL DIAMETER

NOTES:

1. TREE PIT SHALL NOT BE LESS THAN (3) TIMES ROOT BALL DIA.
2. CUT ALL TIES AND FOLD BACK BURLAP FROM UPPER 1/3 OF ROOT BALL
3. REMOVE ALL PLASTIC AND TWINE
4. TREE STAKES PERPENDICULAR TO THE PREVAILING WIND
5. PLANT TREES 2" HIGHER THAN DEPTH GROWN IN NURSERY

① TYPICAL DECIDUOUS TREE PLANTING DETAIL

NTS

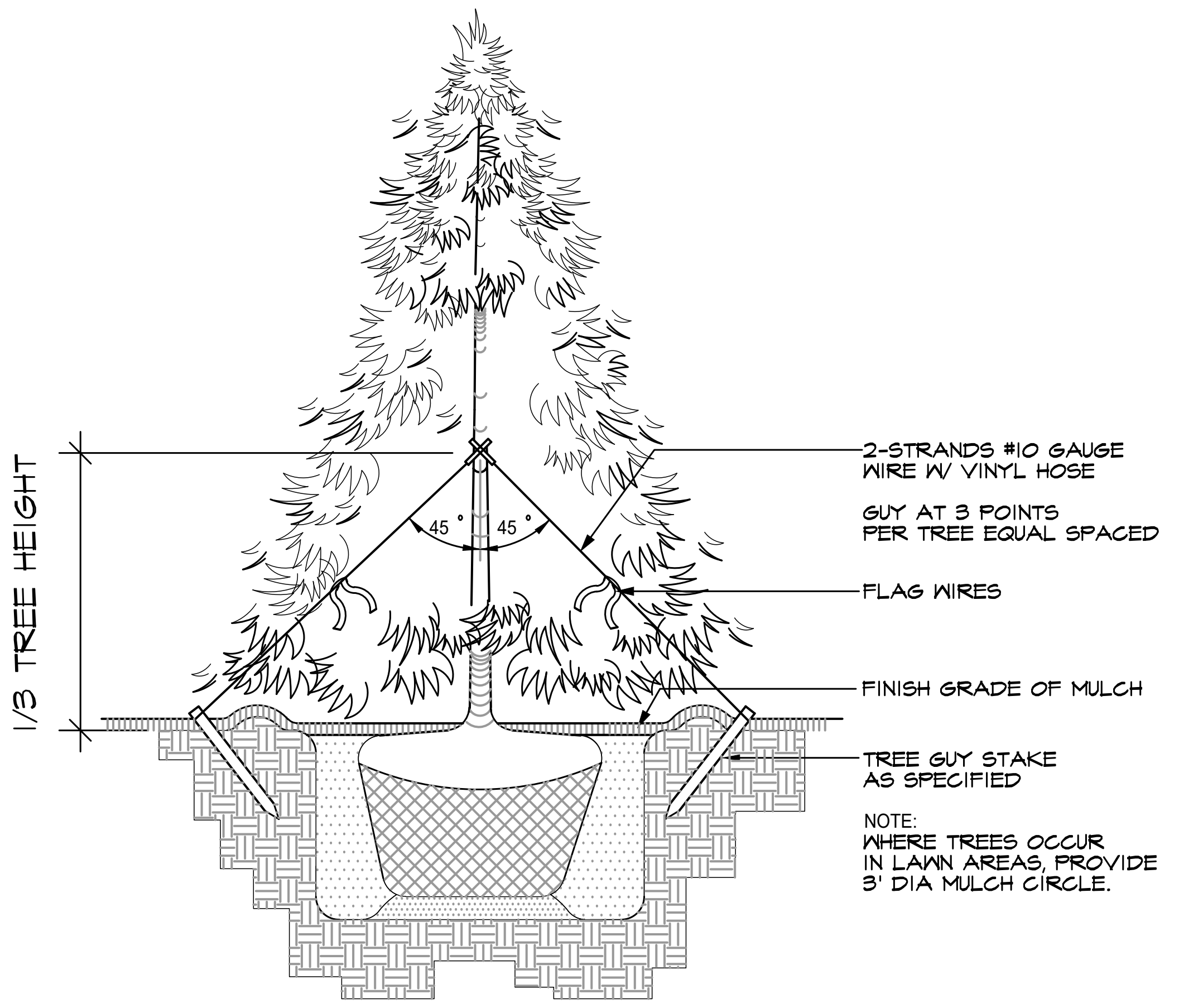
1/3 TREE HEIGHT
45°
45°
2-STRANDS #10 GAUGE WIRE W/ VINYL HOSE
GUY AT 3 POINTS PER TREE EQUAL SPACED
FLAG WIRES
FINISH GRADE OF MULCH
TREE GUY STAKE AS SPECIFIED
NOTE:
WHERE TREES OCCUR IN LAWN AREAS, PROVIDE 3' DIA MULCH CIRCLE.

② TYPICAL EVERGREEN TREE PLANTING DETAIL

NTS

Created: 10/8/24
Drawn: NH
1 10-12-24 Revised to 6 trees
GCA

CRAMER DESIGN CONSULTANTS, INC.
LANDSCAPE ARCHITECT
1909 242ND STREET SE
BOTHELL, WA 98021
425-241-6258

STATE OF
WASHINGTON
REGISTERED
LANDSCAPE ARCHITECT
Gayle Cramer
GAYLE L. CRAMER
CERTIFICATE NO. 634

MS1075
4104 83RD AVE SE MERCER ISLAND, WA

SHEET
L-01
OF 1 SHEETS

LEGAL DESCRIPTION

PER PERSONAL REPRESENTATIVE'S DEED RECORDING #9511090268

LOT 8, BLOCK 1, ISLAND RIDGE TRACTS, ACCORDING TO THE PLAT RECORDED IN VOLUME 47 OF PLATS, PAGE 71, IN KING COUNTY, WASHINGTON.

BASIS OF BEARINGS

N 89°45'50" E BETWEEN FOUND CENTERLINE MONUMENTATION ALONG SE 42ND ST PER PLAT

REFERENCES

R1. RECORD OF SURVEY, VOL. 132, PG. 105, RECORDS OF KING COUNTY, WASHINGTON.
R2. RECORD OF SURVEY, VOL. 71, PG. 216, RECORDS OF KING COUNTY, WASHINGTON.

VERTICAL DATUM

NAVD88 PER CITY OF MERCER ISLAND BENCHMARK #3060
CONC MON W/ 2" BRASS CAP W/ PUNCH, DOWN 0.75'.
(INTERSECTION OF ISLAND CREST WAY & SE 42ND ST)
ELEV: 284.936'

SITE TEMP. BENCHMARK
DESCRIPTION: SET BENCHTIE IN PP
LOCATION: WEST SIDE 83RD AVE SE
ELEVATION: 274.71'

SURVEYOR'S NOTES

1. THE TOPOGRAPHIC SURVEY SHOWN HEREON WAS PERFORMED IN JULY OF 2023. THE FIELD DATA WAS COLLECTED AND RECORDED ON MAGNETIC MEDIA THROUGH AN ELECTRONIC THEODOLITE. THE DATA FILE IS ARCHIVED ON DISC OR CD. WRITTEN FIELD NOTES MAY NOT EXIST. CONTOURS ARE SHOWN FOR CONVENIENCE ONLY. DESIGN SHOULD RELY ON SPOT ELEVATIONS.
2. ALL MONUMENTS SHOWN HEREON WERE LOCATED DURING THE COURSE OF THIS SURVEY UNLESS OTHERWISE NOTED.
3. THE TYPES AND LOCATIONS OF ANY UTILITIES SHOWN ON THIS DRAWING ARE BASED ON INFORMATION PROVIDED TO US, BY OTHERS OR GENERAL INFORMATION READILY AVAILABLE IN THE PUBLIC DOMAIN INCLUDING, AS APPLICABLE, IDENTIFYING MARKINGS PLACED BY UTILITY LOCATE SERVICES AND OBSERVED BY TERRANE IN THE FIELD. AS SUCH, THE UTILITY INFORMATION SHOWN ON THESE DRAWINGS ARE FOR INFORMATIONAL PURPOSES ONLY AND SHOULD NOT BE RELIED ON FOR DESIGN OR CONSTRUCTION PURPOSES; TERRANE IS NOT RESPONSIBLE OR LIABLE FOR THE ACCURACY OR COMPLETENESS OF THIS UTILITY INFORMATION. FOR THE ACCURATE LOCATION AND TYPE OF UTILITIES NECESSARY FOR DESIGN AND CONSTRUCTION, PLEASE CONTACT THE SITE OWNER AND THE LOCAL UTILITY LOCATE SERVICE (800–424–5555).
4. SUBJECT PROPERTY TAX PARCEL NO. 3626500040
5. SUBJECT PROPERTY AREA PER THIS SURVEY IS 14,078 S.F. (0.32 ACRES)
6. EXISTING STRUCTURE(S) LOCATION AND DIMENSIONS ARE MEASURED FROM THE FACE OF THE SIDING UNLESS OTHERWISE NOTED.
7. FIELD DATA FOR THIS SURVEY WAS OBTAINED BY DIRECT FIELD MEASUREMENTS WITH A CALIBRATED ELECTRONIC 3–SECOND TOTAL STATION AND/OR SURVEY GRADE GPS OBSERVATIONS. ALL ANGULAR AND LINEAR RELATIONSHIPS ARE ACCURATE AND MEET THE STANDARDS SET BY WAC 332–130–090.

LEGEND

⌖	BENCHMARK
—℄—	CENTERLINE ROW
—□—□—	FENCE LINE (WOOD)
⊗	MONUMENT (IN CASE, FOUND)
— — —	PROPERTY LINES (ADJACENT)
——	PROPERTY LINE (SUBJECT)
●	REBAR & CAP (SET)
○	REBAR AS NOTED (FOUND)
▨	RETAINING WALL
—— ——	RIGHT–OF–WAY LINES
—— – – ——	SUBDIVISION LINES
▨	BUILDING
PST □	POST
SIZE TYPE ◎	TREE (AS NOTED)
▒	ASPHALT SURFACE
░	CONCRETE SURFACE
▨	DECK
░	GRAVEL SURFACE
▨	ROCKERY
G □	GAS METER
—G—	GAS LINE
P □	POWER METER

PP ○	POWER POLE
—P—	POWER (OVERHEAD)
▣	INLET (TYPE 1)
—SD—	STORM DRAIN LINE
○	SEWER MANHOLE
—SS—	SEWER LINE
WM □	WATER METER
—W—	WATER LINE
BLDG	BUILDING
C.C.	CENTER CHANNEL
CALC'D	CALCULATED
CB	CATCH BASIN
COS	CITY OF SEATTLE
CONC	CONCRETE
COR	CORNER
DEC	DECIDUOUS
ELEV	ELEVATION
EVG	EVERGREEN
FF	FINISH FLOOR
G	GAS
LS#	LAND SURVEYOR NUMBER
MEAS	MEASURED
MON	MONUMENT
OHP	OVERHEAD POWER
PROP	PROPERTY
SD	SERVICE DRAIN
SSMH	SANITARY SEWER MANHOLE
SF	SQUARE FEET

VICINITY MAP

N.T.S.

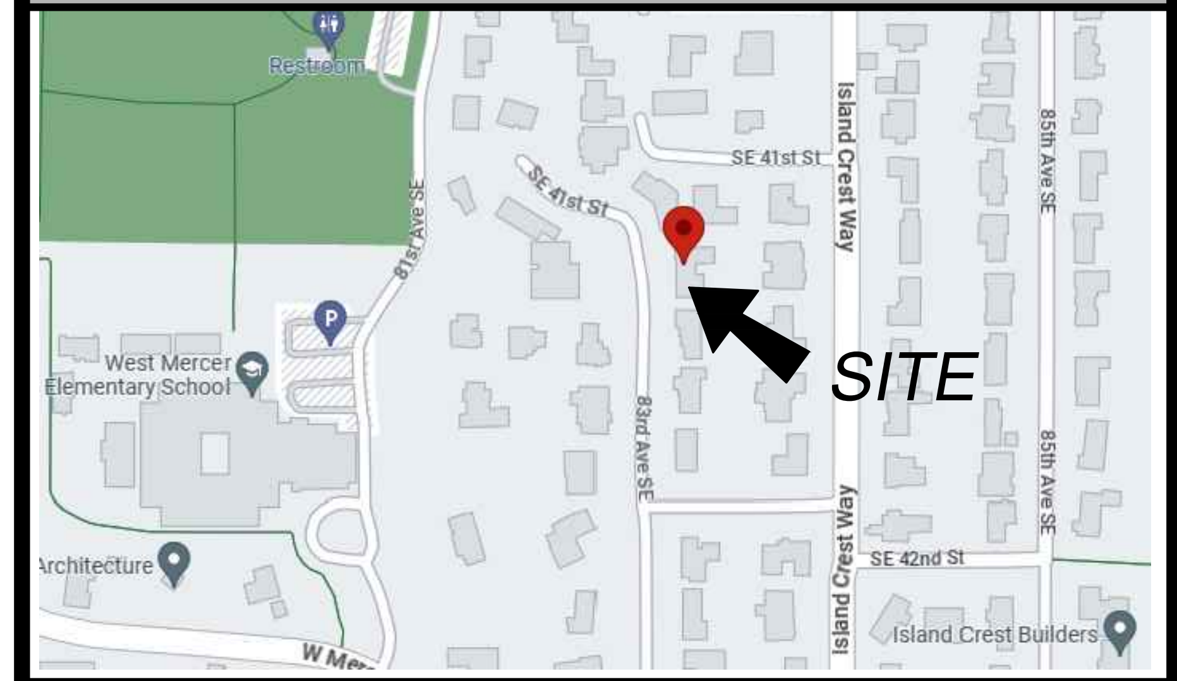
Restroom
SE 41st St
Island Crest Way
85th Ave SE
SE 41st St
81st Ave SE
SITE
West Mercer Elementary School
84th Ave SE
SE 42nd St
Island Crest Way
85th Ave SE
Architecture
Island Crest Builders
W Mer

TOPOGRAPHIC & BOUNDARY SURVEY

STEEP SLOPE/BUFFER DISCLAIMER:
THE LOCATION AND EXTENT OF STEEP SLOPES SHOWN ON THIS DRAWING ARE FOR INFORMATIONAL PURPOSES ONLY AND CANNOT BE RELIED ON FOR DESIGN AND/OR CONSTRUCTION. THE PITCH, LOCATION, AND EXTENT ARE BASED SOLELY ON OUR GENERAL OBSERVATIONS ON SITE AND OUR CURSORY REVIEW OF READILY AVAILABLE PUBLIC DOCUMENTS; AS SUCH, TERRANE CANNOT BE LIABLE OR RESPONSIBLE FOR THE ACCURACY OR COMPLETENESS OF ANY STEEP SLOPE INFORMATION. ULTIMATELY, THE LIMITS AND EXTENT OF ANY STEEP SLOPES ASSOCIATED WITH ANY SETBACKS OR OTHER DESIGN OR CONSTRUCTION PARAMETERS MUST BE DISCUSSED AND APPROVED BY THE REVIEWING AGENCY BEFORE ANY CONSTRUCTION CAN OCCUR.

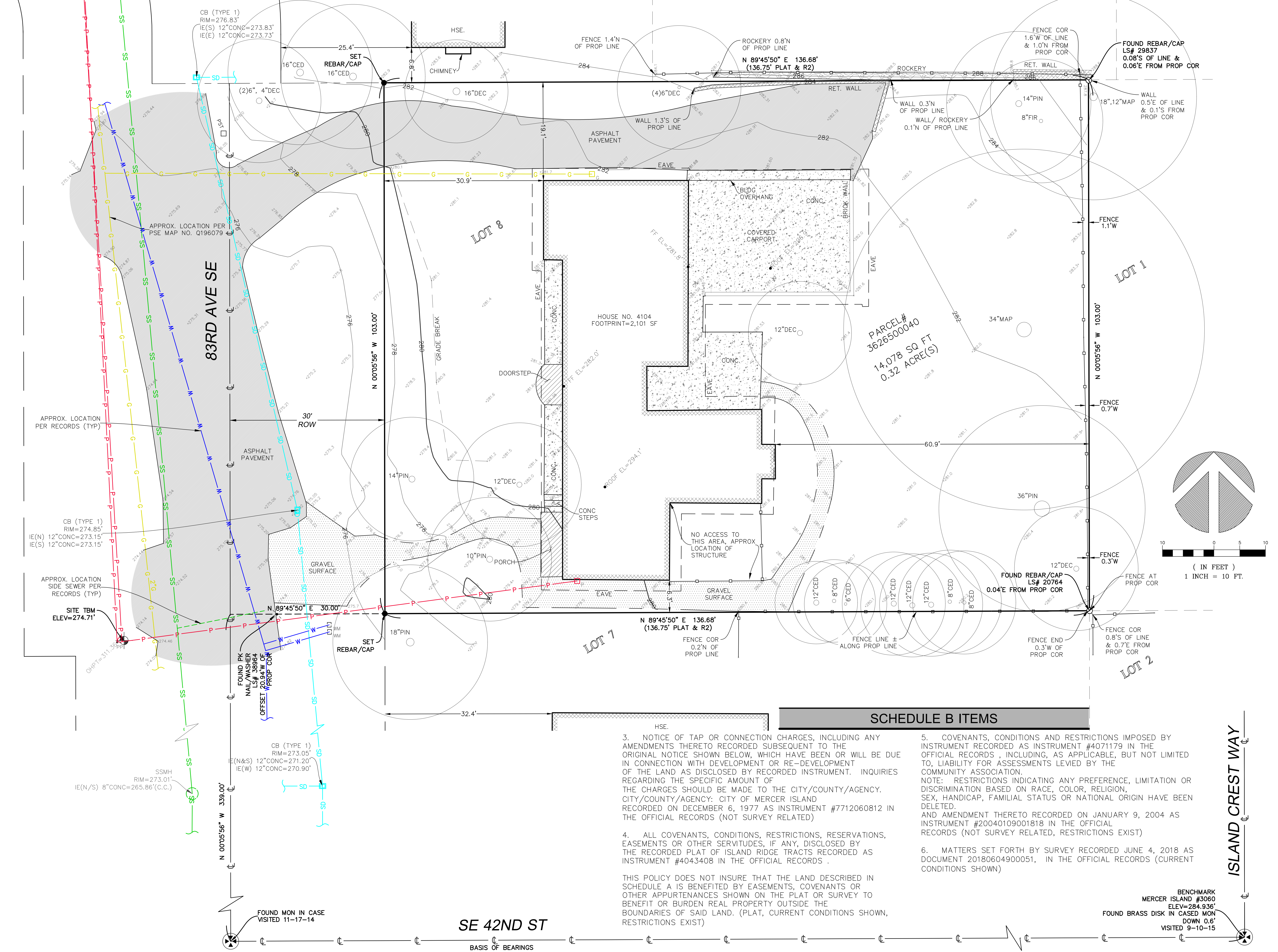
SSMH
RIM=277.61'
IE(NW/S) 8"CONC=269.21'(C.C.)
CB (TYPE 1)
RIM=276.83'
IE(S) 12"CONC=273.83'
IE(E) 12"CONC=273.73'
25.4'
SET REBAR/CAP
16"CED
16"CED
(2)6", 4"DEC
6.8'
HSE.
CHIMNEY
16"DEC
FENCE 1.4'N OF PROP LINE
284
ROCKERY 0.8'N OF PROP LINE
N 89°45'50" E 136.68'
(136.75' PLAT & R2)
(4)6"DEC
ROCKERY
RET. WALL
WALL 1.3'S OF PROP LINE
ASPHALT PAVEMENT
19.1'
WALL 0.3'N OF PROP LINE
WALL/ ROCKERY 0.1'N OF PROP LINE
FENCE COR 1.6'W OF LINE & 1.0'N FROM PROP COR
FOUND REBAR/CAP
LS# 29837
0.08'S OF LINE &
0.06'E FROM PROP COR
RET. WALL
14"PIN
8"FIR
18",12"MAP
WALL 0.5'E OF LINE & 0.1'S FROM PROP COR
PST
APPROX. LOCATION PER PSE MAP NO. Q196079
30.9'
EAVE
BLDG OVERHANG
CONC
COVERED CARPORT
BRICK WALL
ROOF EL=296.9'
EAVE
FENCE 1.1'W
LOT 8
FF EL=281.8'
LOT 1
83RD AVE SE
N 00°05'56" W 103.00'
GRADE BREAK
EAVE
CONC.
HOUSE NO. 4104
FOOTPRINT=2,101 SF
12"DEC
CONC.
PARCEL# 3626500040
14,078 SQ FT
0.32 ACRE(S)
34"MAP
DOORSTEP
FF EL=282.0'
EAVE
N 00°05'56" W 103.00'
FENCE 0.7'W
APPROX. LOCATION PER RECORDS (TYP)
30' ROW
ASPHALT PAVEMENT
14"PIN
12"DEC
ROOF EL=294.1'
CONC.
60.9'
CONC STEPS
36"PIN
CB (TYPE 1)
RIM=274.85'
IE(N) 12"CONC=273.15'
IE(S) 12"CONC=273.15'
NO ACCESS TO THIS AREA, APPROX LOCATION OF STRUCTURE
10"PIN
PORCH
GRAVEL SURFACE
GRAVEL SURFACE
12"DEC
FENCE 0.3'W
APPROX. LOCATION SIDE SEWER PER RECORDS (TYP)
EAVE
6.3'
12"CED
8"CED
6"CED
12"CED
12"CED
12"CED
8"CED
8"CED
FOUND REBAR/CAP
LS# 20764
0.04'E FROM PROP COR
FENCE AT PROP COR
SITE TBM
ELEV=274.71'
N 89°45'50" E 30.00'
WM
WM
18"PIN
SET REBAR/CAP
N 89°45'50" E 136.68'
(136.75' PLAT & R2)
FENCE COR 0.2'N OF PROP LINE
FENCE LINE ± ALONG PROP LINE
FENCE END 0.3'W OF PROP COR
FENCE COR 0.8'S OF LINE & 0.7'E FROM PROP COR
LOT 7
LOT 2
OHPT=311.36'
PP
FOUND PK NAIL/WASHER LS# 38964 OFFSET 20.94'W OF PROP COR
32.4'
HSE.
CB (TYPE 1)
RIM=273.05'
IE(N&S) 12"CONC=271.20'
IE(W) 12"CONC=270.90'
SSMH
RIM=273.01'
IE(N/S) 8"CONC=265.86'(C.C.)
N 00°05'56" W 339.00'
FOUND MON IN CASE
VISITED 11–17–14
SE 42ND ST
BASIS OF BEARINGS
N 89°45'50" E 333.37' MEAS.
(333.36' R1)(333.50' PLAT)
ISLAND CREST WAY
BENCHMARK
MERCER ISLAND #3060
ELEV=284.936'
FOUND BRASS DISK IN CASED MON
DOWN 0.6'
VISITED 9–10–15
10
0
5
10
(IN FEET)
1 INCH = 10 FT.

SCHEDULE B ITEMS

3. NOTICE OF TAP OR CONNECTION CHARGES, INCLUDING ANY AMENDMENTS THERETO RECORDED SUBSEQUENT TO THE ORIGINAL NOTICE SHOWN BELOW, WHICH HAVE BEEN OR WILL BE DUE IN CONNECTION WITH DEVELOPMENT OR RE–DEVELOPMENT OF THE LAND AS DISCLOSED BY RECORDED INSTRUMENT. INQUIRIES REGARDING THE SPECIFIC AMOUNT OF THE CHARGES SHOULD BE MADE TO THE CITY/COUNTY/AGENCY.
CITY/COUNTY/AGENCY: CITY OF MERCER ISLAND
RECORDED ON DECEMBER 6, 1977 AS INSTRUMENT #7712060812 IN THE OFFICIAL RECORDS (NOT SURVEY RELATED)

4. ALL COVENANTS, CONDITIONS, RESTRICTIONS, RESERVATIONS, EASEMENTS OR OTHER SERVITUDES, IF ANY, DISCLOSED BY THE RECORDED PLAT OF ISLAND RIDGE TRACTS RECORDED AS INSTRUMENT #4043408 IN THE OFFICIAL RECORDS .

THIS POLICY DOES NOT INSURE THAT THE LAND DESCRIBED IN SCHEDULE A IS BENEFITED BY EASEMENTS, COVENANTS OR OTHER APPURTENANCES SHOWN ON THE PLAT OR SURVEY TO BENEFIT OR BURDEN REAL PROPERTY OUTSIDE THE BOUNDARIES OF SAID LAND. (PLAT, CURRENT CONDITIONS SHOWN, RESTRICTIONS EXIST)

5. COVENANTS, CONDITIONS AND RESTRICTIONS IMPOSED BY INSTRUMENT RECORDED AS INSTRUMENT #4071179 IN THE OFFICIAL RECORDS , INCLUDING, AS APPLICABLE, BUT NOT LIMITED TO, LIABILITY FOR ASSESSMENTS LEVIED BY THE COMMUNITY ASSOCIATION.
NOTE: RESTRICTIONS INDICATING ANY PREFERENCE, LIMITATION OR DISCRIMINATION BASED ON RACE, COLOR, RELIGION, SEX, HANDICAP, FAMILIAL STATUS OR NATIONAL ORIGIN HAVE BEEN DELETED.
AND AMENDMENT THERETO RECORDED ON JANUARY 9, 2004 AS INSTRUMENT #20040109001818 IN THE OFFICIAL RECORDS (NOT SURVEY RELATED, RESTRICTIONS EXIST)

6. MATTERS SET FORTH BY SURVEY RECORDED JUNE 4, 2018 AS DOCUMENT 20180604900051, IN THE OFFICIAL RECORDS (CURRENT CONDITIONS SHOWN)

INDEXING INFORMATION

NW 4	NE 4 ☒	
SW 4	SE 4	

NE 1/4 NE 1/4
SECTION: 13
TOWNSHIP: 24N
RANGE: 04E, W.M.
COUNTY: KING

We are the measure | terrane.net

TOPOGRAPHIC & BOUNDARY SURVEY
PARCEL NO. 3626500040

JAYMARC HOMES, LLC

4104 83RD AVE SE
MERCER ISLAND, WA 98040

EDWIN J. GREEN JR.
15025
08/04/23

TERRANE

10801 Main Street, Suite 102
Bellevue, WA 98004
p: 425-458-4488 | e: info@terrane.net

JOB NUMBER:	231294
DATE:	08/02/23
DRAFTED BY:	TDB
CHECKED BY:	EJG/TLR/TRM
SCALE:	1" = 10'

REVISION HISTORY	
8/4/23	ADD TITLE

SHEET NUMBER
1 OF 1